Recruitment of National Agents

+86-13958895999

兴生机械科技

XingSheng Machinery Technology

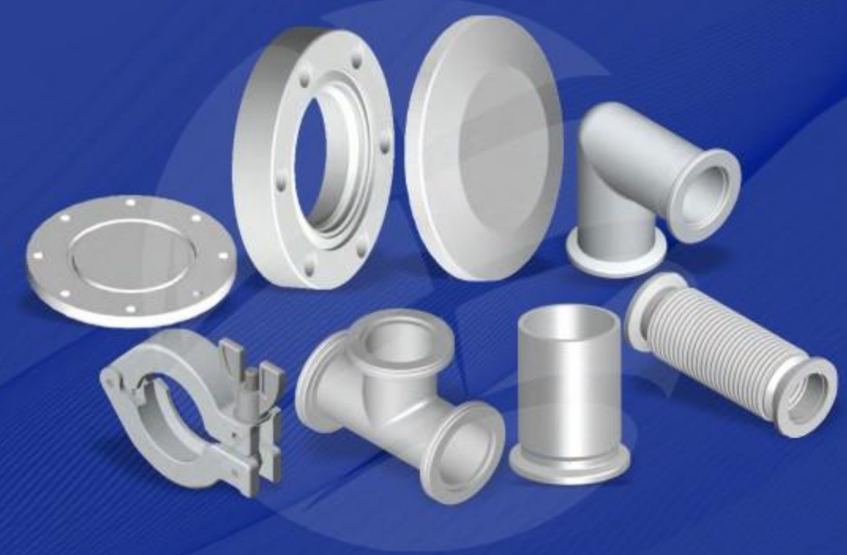

VACUUM VALVES

VACUUM FLANGES

VACUUM FITTINGS

China·Xingsheng Machinery Technology Co., Ltd

Address: No. 51, wutong Road, Binhai Park, Wenzhou Economic and Technological Development Zone
Phone: +86-577-86810730
Fax: +86-577-86822251
E-mail: xingsheng@seasom.com
Http:www.seasom.com

WeChat

Web

兴生机械科技
XingSheng Machinery Technology

COMPANY PROFILE

>> New for Far and Win for the Future

CHINA XINGSHENG MACHINERY TECHNOLOGY CO., LTD

XingSheng Machinery Technology Co., Ltd has existed for three decades, and nestled in BinHai economic zone, Wenzhou city, China. We are the premier licensed Chinese manufacturer of stainless steel flanges, sanitary valves and pipe fittings. XingSheng has always stood for quality and dependability since first opened its doors in 1990. We passed ISO 9001 certification, was approved by DET NORSKE VERITAS (DNV), and holding manufacture license of special equipment (TS) for valves, flanges and pipe fittings, which are widely applied in secondary water supply, automatic pumping station, sewage treatment system, fine chemical engineering, industries of food, brewery and pharmacy. We keep establishing innovations and solutions to make a contribution to the water environment.

XingSheng adopts advanced processing and inspection equipment, such as high precision CNC, 4-Axis Machining Center, automatic pipe welding machine, spectrograph and etc….. Meanwhile, our processing, welding and surface treatment techniques are in a world leading level. XingSheng's philosophy "Paving the way with innovation, and win-win future",. Keeping on innovating the technology and designation, to improve our products and provide clients the best solution, and create more values.

XingSheng wins customers' trust and support by virtue of our core value "Service first, customer foremost", and ultimately serve to promote human live quality.

Full of confidence in the product quality,by coexisting with society and cooperative progress, we will develop company and make contribution to the human beings.

SINCE **1990**

兴生机械科技
XingSheng Machinery Technology

ENTERPRISE QUALIFICATION

>> New for Far and Win for the Future

In a fiercely competitive business environment, corporate qualifications are not only the cornerstone of legal operation, but also the key to winning customer trust and market competitiveness. Since its establishment, our company has been committed to the continuous improvement of qualification construction. Currently, we have multiple industry-leading professional certifications, including ISO quality management system certification, national first-class qualification for construction general contracting, and multiple product patent certificates.

These qualifications not only demonstrate our outstanding abilities in technology, management, innovation, etc., but also win us the favor and recognition of numerous partners.

TS CE SIL

ENHANCE ENTERPRISE QUALIFICATIONS AND CREATE EXCELLENT BRANDS

兴生机械科技
XingSheng Machinery Technology

CONTENTS

01 KF SERIES

General Information 1-2
Complete Clamp Assemblies 1-3
Application for KF Components 1-4
Centering Ring 1-5
Blank 1-6
Bored Blank 1-7
Socket Weld Flange (KF10~KF63) 1-7
Socket Weld Flange (KF80~KF160) 1-8
Half Nipple (Short) 1-8
Half Nipple (Long) 1-9
Half Nipple (Short for JIS Pipe) 1-9
Half Nipple (Long for JIS Pipe) 1-10
Clamp 1-10
Clamp-304S.S 1-11
Spring Clamp with plastic nut 1-11
Spring Clamp with wing nut 1-12
Toggle Clamp with lock 1-12
KF Chain Clamp (KF16~KF63) 1-13
KF Chain Clamp (KF80~KF200) 1-13
Bulkhead Clamp 1-14
Nail Clamp 1-15
Cap 1-15
KF Braided Flexible Hoses 1-16
KF Flexible Hoses 1-17
KF Compressible Bellows Connections 1-18
KF Flexible Hoses Teflon Bellows 1-18
KF Full Nipples 1-19
KF 90° Elbows 1-19
KF 90° Elbows-Aluminum 1-20
KF Tees 1-20
KF Tees-Aluminum 1-21
KF Unequal Tees 1-21
KF 4-Way Crosses 1-22
KF Five-Way Crosses 1-22
KF Six-Way Crosses 1-23
KF Centering Ring 1-23
KF Centering Ring with O'Ring 1-24
KF Centering Ring with Outer Ring & O'Ring 1-25
KF Centering Ring Adaptor & O'Ring 1-26
KF Meshed Centering Ring 1-27
KF Overpressure Ring 1-28

02 ISO SERIES

General Information 2-2
Complete Clamp Assemblies 2-3
Application for ISO Components 2-5
Connections of ISO series Fittings 2-5
Center Ring 2-6
Blank 2-7
Bored Blank 2-7
ISO Bolted Blank 2-8
Bolted Flange 2-8
Bolted Flange-Tapped 2-9
Rotatable Bolt Ring 2-9
Half Nipple 2-10
Split Retainer Ring 2-10
Single Wall Clamp 2-11,12
Double Wall Clamp 2-12
Double Claw Clamp 2-13
Cap 2-14
ISO Flexible Hoses 2-15
ISO Compressible Bellows Connections 2-15
ISO Teflon Bellows 2-16
ISO Full Nipples 2-17
ISO 90° Elbows 2-17
ISO Tees 2-18
ISO 4-Way Crosses 2-18
ISO Five-Way Crosses 2-19
ISO Six-Way Crosses 2-19
ISO Centering Ring-Europe 2-20
ISO Centering Ring-USA 2-21
ISO Centering Ring with Viton O'Ring 2-22
ISO Centering Ring with NBR O'Ring 2-23
ISO Centering Ring with Viton O'Ring 2-24
ISO Centering Ring with NBR O'Ring 2-25
ISO Outer Ring Centering Ring & Viton O'Ring 2-26
ISO Outer Ring Centering Ring & NBR O'Ring 2-27
ISO Outer Ring Centering Ring & Viton O'Ring 2-28
ISO Outer Ring Centering Ring & NBR O'Ring 2-29

03 CF SERIES

General Information 3-2
Technical Data 3-4
Applications for CF Components 3-5
Connections of CF-series Fittings 3-5
Blank 3-6
Bored Blank (CF16) 3-10
Bored Blank-Neck (CF16) 3-11
Bored Blank-Neck (CR16) 3-12
Bored Flange 3-13
Reducing Flange 3-17
Half Nipple 3-18
Plate Nut 3-19
Cap 3-19
OFHC Copper Gasket 3-20
OFHC Annealed Gasket 3-21
OFHC+Silver plated Gasket 3-22
Viton Gasket 3-23
CF Flexible Hoses- Rotatable 3-24
CF Compressible Bellows Connections Rotatable 3-25
CF Nipples-Fixed 3-26
CF Nipples-Rotatable 3-26
CF 90° Elbows-Fixed 3-27
CF90° Elbows-Rotatable 3-27
CF Tees-Fixed 3-28
CF Tees- Rotatable 3-28
CF 4 Way Crosses-Fixed 3-29
CF 4 Way Crosses-Rotatable 3-29
CF Five-Way Crosses-Fixed 3-30
CF Five-Way Crosses-Rotatable 3-30
CF Six-Way Crosses-Fixed 3-31
CF Six-Way Crosses- Rotatable 3-31
CF CUBES with Fractional Thread 3-32
CF CUBES with Metric Thread 3-32

04 FITTING SERIES

General Information 4-2
Pipe Wall Thickness in mm 4-3
Pipe Wall Thickness in inch 4-4
Tube Wall Thickness in mm 4-5
Tube Wall Thickness in inch 4-6
ASTM A269 Tubing Pressure Ratings 4-7
ASTM A312 Pipe Pressure Ratings 4-10
Corrosion Resistance Guide 4-12
Conical Reducers 4-13
90° Elbows 4-14
90° Elbows with Tangents 4-14
45° Elbows 4-15
45° Elbows with Tangents 4-15
Tees 4-16
4-Way Crosses 4-16
Unequal Tees 4-17
Unequal 4-Ways Crosses 4-17
Five-Way Crosses 4-18
Six-Way Crosses 4-18

兴生机械科技
XingSheng Machinery Technology

CONTENTS

05 ADAPTOR SERIES

General Information....5-2
Explanation of ISO Pipe Thread....5-4
Thread Symbol List....5-6
ANSI-KF Tubulated Adaptor....5-9
ANSI-KF Tubulated Adaptor with O'Ring Groove....5-9
CF-ISO Tubulated Adaptor....5-10
CF-KF Tubulated Adaptor....5-10
ISO-KF Tubulated Adaptor....5-11
CF Reducing Adaptor-Fixed....5-12
CF Reducing Adaptor-Small Flange Rotatable....5-12
KF-VCR Male Adaptor....5-13
KF-VCR Female Adaptor....5-13
KF-Swagelok Adaptor....5-14
KF-Rubber Hose Adaptor....5-14
KF-Male Pipe Adaptor....5-15
KF-Female Pipe Adaptor....5-16
KF-Quick-Disconnect Adaptor....5-17
KF-KF Conical Reducing Adaptor....5-17
ISO-K F Conical Reducing Adaptor....5-18
ISO-IS O Conical Reducing Adaptor....5-18

06 VACUUM VALVE

General Information....6-5
Ordering Information....6-7

Vacuum Poppet Valves
Angle Valve....6-11
Manual....6-11
Pneumatic....6-16
Large Angle Valve....6-26
Manual....6-26,29
Pneumatic....6-27,30
Y-Inline Valve....6-31
Manual....6-31
Pneumatic....6-33
Z-Inline Valve....6-35
Manual....6-35
Pneumatic....6-38
Formed Bellows seal stainless Valve....6-41
Angle Valve....6-41
Y-Inline Valve....6-41
Two-Stage Valve....6-42
Aluminum Block Valves....6-43
All-in-one angle valve-Pneumatic....6-45
Aluminum angle valve-Pneumatic....6-46
Aluminum angle valve-Manual....6-51

Butterfly Valves
Pneumatic....6-53
3-Position....6-57
APC....6-60
Manual....6-64

Ball V alves
Pneumatic....6-68
Motor Drive....6-68
Manual....6-69

Check Valves
Check Valve....6-70

Vent Valves
Vent Valve....6-71

Bakeable All-metal Valves
Angle valve....6-72
Straight through valve....6-72

Teflon Coating Valves
Angle valve-Pneumatic....6-74
Y-Inline valve-Pneumatic....6-75
Angle valve-Manual....6-76

Accessories
Heating Jacket....6-77
Valve Kit....6-78

07 GATE VALVE

Vacuum gate valves manufacturers....7-4
Gate Valve(Technical Data)....7-5
Linkage mechanism....7-6
Ball groove mechanism....7-6
Numbering System....7-7
UHV-gate valves (unlubricated mechanism)....7-8
CF Flange-mini Manual UHV....7-9
CF Flange-mini Pneumatic UHV....7-9
CF Flange-large Pneumatic UHV....7-10
CF Flange-Ball Manual....7-11
CF Flange-Ball Pneumatic....7-12
3-Position-Throttle Ball UHV....7-13
HV Gate Valve (Linkage mechanism)....7-15
KF Flange-mini Manual HV....7-16
KF Flange-mini Pneumatic HV....7-16
ISO Flange-large Pneumatic HV....7-17
ISO Flange Manual HV....7-18
ISO Flange Pneumatic HV....7-19
3-Position Throttle Linkage mwchanism HV....7-20
3-Position Throttle ISO HV....7-21
Limit Switch UHV Gate Valve....7-22
Limit Switch CF-Mini UHV....7-23
Limit Switch CF Large UHV....7-24
Limit Switch CF UHV....7-25
Limit Switch HV Gate Valve....7-26
Limit Switch KF-Mini HV....7-27
Limit Switch ISO Large HV....7-28
Limit Switch ISO Ball HV....7-29
Gate valve kit....7-30
HV Aluminum Gate Valve....7-31
Pendulum valves....7-32
Pendulum-Nickel plated....7-33
Pendulum-Hard anodized....7-33
3-Position Pendulum valves....7-34
3-Position Pendulum-Nickel plated....7-35
3-Position Pendulum- Hard anodized....7-35
APC Pendulum valves....7-36
APC Pendulum- Nickel plated....7-38
APC Pendulum-Hard anodized....7-39
Transfer valves and doors....7-40
Rectangular transfer-Electrolytic polishing....7-41
Rectangular transfer-Hard anodized....7-43
Rectangular doors valve....7-45

08 ACCESSORIES

ANSI,JIS,DIN Flange....8-2
ANSI ASA Blank....8-6
Welding Bellows Parts....8-8
Electrical Feedthrough....8-9
Sapphire viewport....8-12
Tempered Glass Viewport....8-13
CaF2 Viewport-KF....8-14
Sapphire Viewport....8-15
Magnetic Fluid Feedthrough....8-16
Molecular Sieve....8-23
Inline LN2 Cold Trap....8-24
Exhaust Filter....8-24

09 VACUUM CHAMBER & SYSTEM

Vacuum Chamber....9-2
UHV Vacuum Chamber....9-4
Vacuum Module System....9-6

10 TECHNICAL INFORMATION

Coversion Table....10-2
Graphic Symbols for Important Comonents Used in Vacuum Technology....10-4
Stainless Steel Specification Table....10-7
Stainless Steel grade chart....10-11
Temperature Range of Generic Elastomer....10-19

01 KF SERIES

General Information 1-2
Complete Clamp Assemblies 1-3
Application for KF Components 1-4
Centering Ring 1-5
Blank 1-6
Bored Blank 1-7
Socket Weld Flange (KF10~KF63) 1-7
Socket Weld Flange (KF80~KF160) 1-8
Half Nipple (Short) 1-8
Half Nipple (Long) 1-9
Half Nipple (Short for JIS Pipe) 1-9
Half Nipple (Long for JIS Pipe) 1-10
Clamp 1-10
Clamp-304S.S 1-11
Spring Clamp with plastic nut 1-11
Spring Clamp with wing nut 1-12
Toggle Clamp with lock 1-12
KF Chain Clamp (KF16~KF63) 1-13
KF Chain Clamp (KF80~KF200) 1-13
Bulkhead Clamp 1-14
Nail Clamp 1-15
Cap 1-15
KF Braided Flexible Hoses 1-16
KF Flexible Hoses 1-17
KF Compressible Bellows Connections 1-18
KF Flexible Hoses Teflon Bellows 1-18
KF Full Nipples 1-19
KF 90° Elbows 1-19
KF 90° Elbows-Aluminum 1-20
KF Tees 1-20
KF Tees-Aluminum 1-21
KF Unequal Tees 1-21
KF 4-Way Crosses 1-22
KF Five-Way Crosses 1-22
KF Six-Way Crosses 1-23
KF Centering Ring 1-23
KF Centering Ring with O'Ring 1-24
KF Centering Ring with Outer Ring & O'Ring 1-25
KF Centering Ring Adaptor & O'Ring 1-26
KF Meshed Centering Ring 1-27
KF Overpressure Ring 1-28

General Information

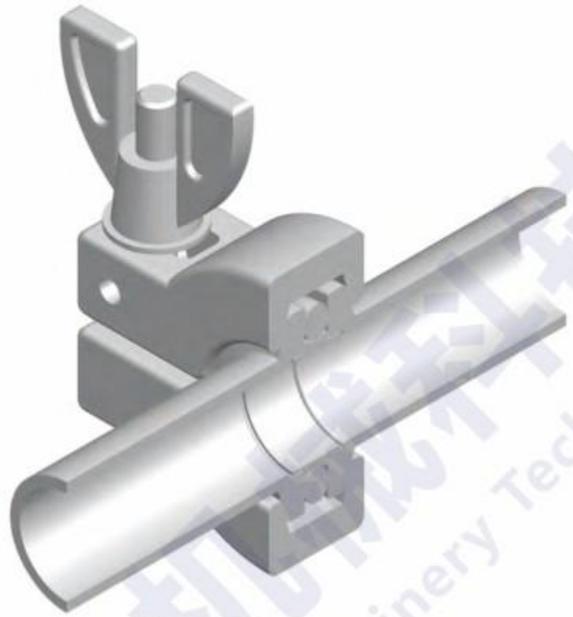

Features

- The typical KF or NW assembly consists of two identical flanges, a center-ring, and an aluminum clamp with a wingnut fastener frequently connect and disconnect without tools.
- The vacuum seal is effected by uniform application of pressure by the clamp on 15° surface of the flange.
- The mating flange surfaces compress an O'ring (held in place by metal centering ring) to generate a seal.

Specifications

- Blanks : 304 S.S. (Other material available upon request)
- Flanges : 304 S.S. (Other material available upon request)
- Fittings : 304 S.S. (Other material available upon request)
- Clamp : Aluminum, Stainless Steel
- O'ring material : Viton, NBR
- Temperature Range : 150°C (Viton) 80°C (NBR)
- Vacuum Rate : $1*10^{-8}$ mbar
- Larger or special size available upon request

All information contained herein was current at time of publication, we reserve the right to change the design/specification for products improvement without notice.

Complete Clamp Assemblies

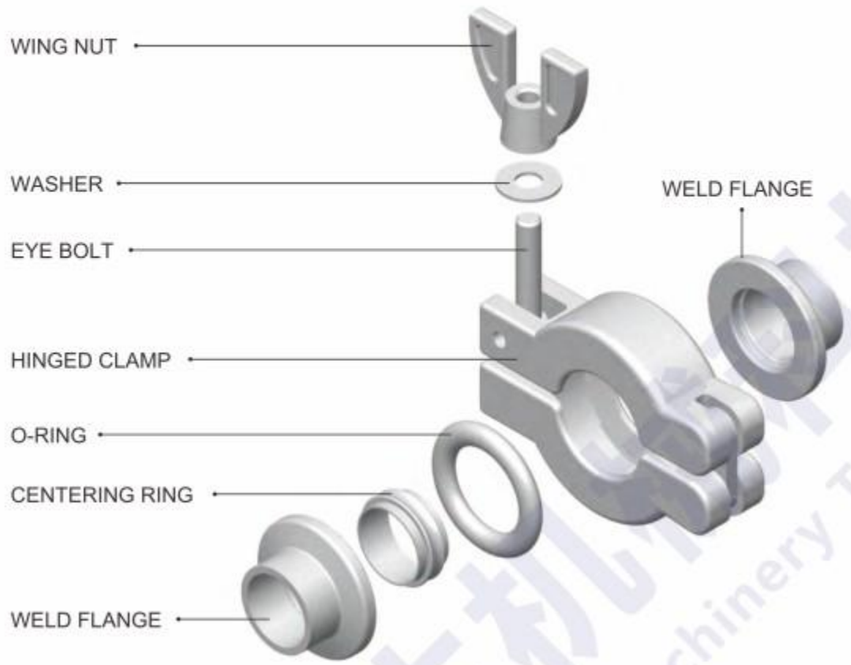

- Hinged Clamp assemblies, detailed above, are the most commonly used method for making KF-Flange vacuum seal connections. Assembly is simplified by the 360° rotatable flanges and self-centering feature of the centering ring.

- Pressure is applied uniformly around the 15° outer surface of both flanges by finger-tightening the single wingnut until the first metal-to-metal contact is made between the spacing lips of the centering ring and the inner surface of the mating flanges. This compresses the O'ring between the flanges and makes the vacuum seal.

Dimension in mm unless otherwise noted
All information contained herein was current at time of publication, we reserve the right to change the design/specification for products improvement without notice.

兴生机械科技
XingSheng Machinery Technology

01 KF SERIES

Application for KF Components

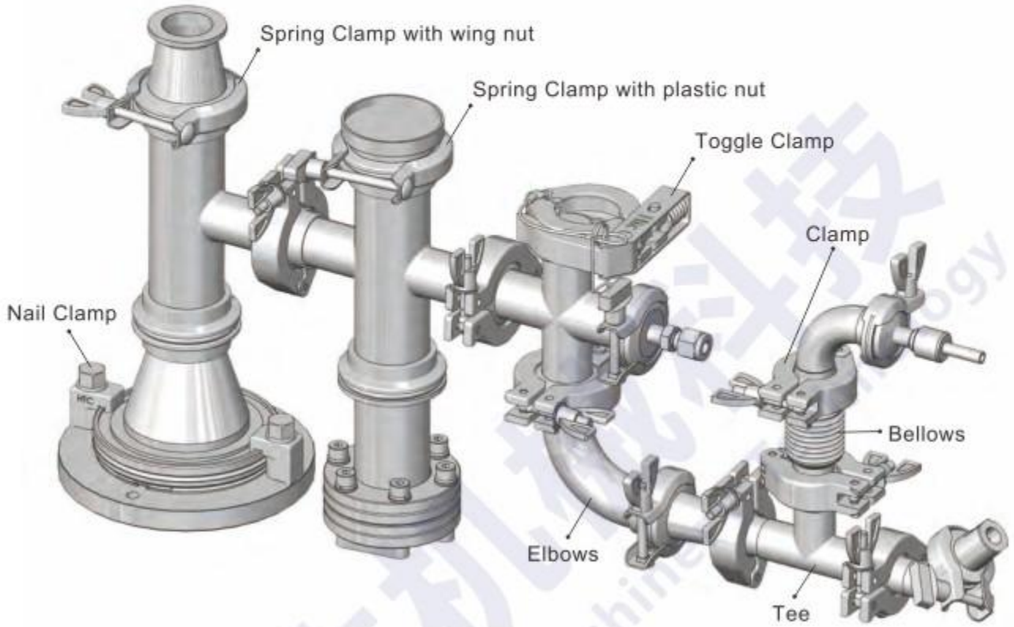

Applications for this system are as varied as the imagination can make them. Some examples are :

1. Roughing and foreline plumbing for large vacuum system.
2. Small system.
3. System demanding frequent change.
4. System demanding frequent cleaning.
5. Experimental system in research laboratories.
6. Teaching laboratories.

Dimension in mm unless otherwise noted
All information contained herein was current at time of publication, we reserve the right to change the design/specification for products improvement without notice.

Centering Ring

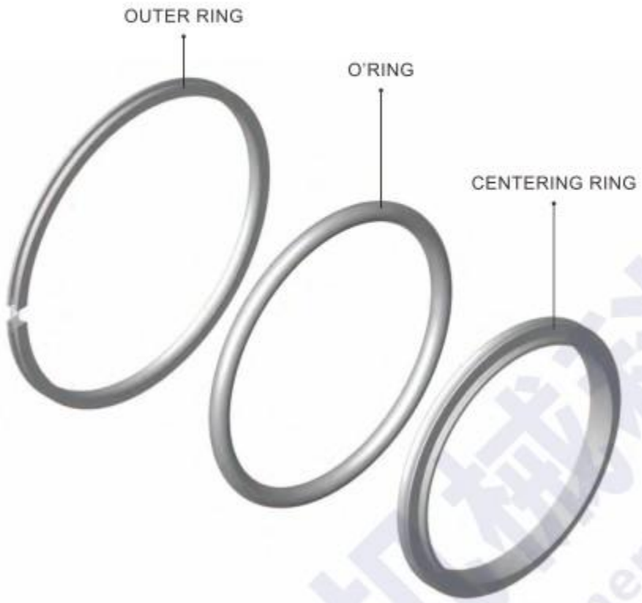

Features

- Viton O'ring bakeable to 200°C intermittently, sustained use to 150°C.
- Vacuum seal of KF-series: O'ring compression by uniform pressure application around the 15° outer flange surface.
- The vacuum seal of ISO-series is made by compressing the O'ring between the mating flanges. This done by alternately wrench-tightening opposing pairs of clamps or bolts until the first metal-to-metal contact is made between the inner surfaces of the flanges and the spacing lips of the centering ring.

Specifications

- Centering Ring : 304 S.S. (Other material available upon request)
- O'ring : Viton (Other material available upon request)
- Outer Ring : Aluminum
- Mesh : 304 S.S.
- Temperature Range : 150°C (Viton) 80°C (NBR)
- Larger or special size available upon request

Applications

- The O'ring is considered a universal sealing device.
  Used as static, dynamic, radial or face seals.
- Vacuum seal.

Dimension in mm unless otherwise noted
All information contained herein was current at time of publication, we reserve the right to change the design/specification for products improvement without notice.

兴生机械科技
XingSheng Machinery Technology

01 KF SERIES

Blank

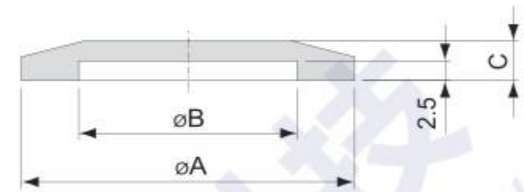

Model No.	Material	A	B	C	Parts No.
KF10BS	304 S.S.	30	12.2	5	150101003
KF16BS	304 S.S.	30	17.2	5	150102003
KF25BS	304 S.S.	40	26.2	5	150103003
KF40BS	304 S.S.	55	41.2	5	150105003
KF50BS	304 S.S.	75	52.2	5	150106003
KF63BS	304 S.S.	87	70	5	150107003
KF80BS	304 S.S.	114	83	12	150108003
KF100BS	304 S.S.	134	102	12	150109003
KF160BS	304 S.S.	190	153	12	150112003
KF10BA	Aluminum	30	12.2	5	150101001
KF16BA	Aluminum	30	17.2	5	150102001
KF25BA	Aluminum	40	26.2	5	150103001
KF40BA	Aluminum	55	41.2	5	150105001
KF50BA	Aluminum	75	52.2	5	150106001
KF63BA	Aluminum	87	70	5	150107001
KF80BA	Aluminum	114	83	12	150108001
KF100BA	Aluminum	134	102	12	150109001
KF160BA	Aluminum	190	153	12	150112001

Dimension in mm unless otherwise noted
All information contained herein was current at time of publication, we reserve the right to change the design/specification for products improvement without notice.

Bored Blank

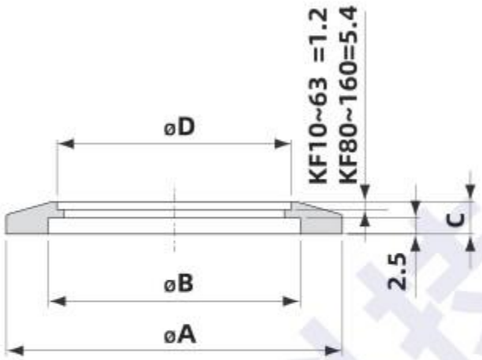

Model No.	Material	A	B	C	D	Parts No.
KF10B12	304 S.S.	30	12.2	5	12.9	150201073
KF16B19	304 S.S.	30	17.2	5	19.3	150202093
KF25B25	304 S.S.	40	26.2	5	25.7	150203113
KF40B38	304 S.S.	55	41.2	5	38.4	150205133
KF50B51	304 S.S.	75	52.2	5	51	150206143
KF63B63	304 S.S.	87	70	5	63.7	150207153
KF80B76	304 S.S.	114	83	12	76.8	150208163
KF100B102	304 S.S.	134	102	12	102.2	150209183
KF160B153	304 S.S.	190	153	12	152.9	150212203

Socket Weld Flange (KF10~KF63)

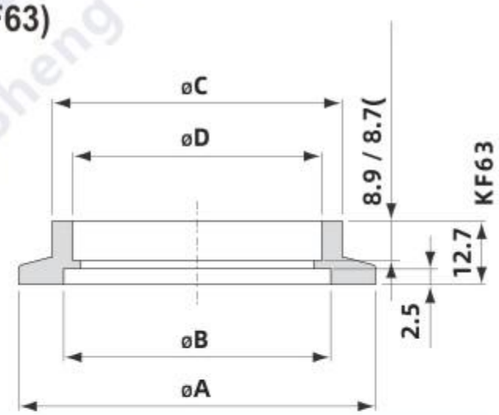

Model No.	Material	A	B	C	D	Parts No.
KF10WS	304 S.S.	30	12.2	16.5	13	150901073
KF16WS	304 S.S.	30	17.2	20.5	19.3	150902093
KF25WS	304 S.S.	40	26.2	29	25.7	150903113
KF40WS	304 S.S.	55	41.2	44.7	38.4	150905133
KF50WS	304 S.S.	75	52.2	57.4	51	150906143
KF63WS	304 S.S.	87	70	67.5	63.7	150907153

Dimension in mm unless otherwise noted

All information contained herein was current at time of publication, we reserve the right to change the design/specification for products improvement without notice.

兴生机械科技
XingSheng Machinery Technology

01 KF SERIES

Socket Weld Flange (KF80~KF160)

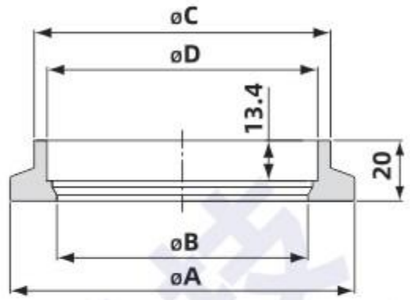

Model No.	Material	A	B	C	D	Parts No.
KF80WS	304 S.S.	114	83	98	89.5	150908AL3
KF100WS	304 S.S.	134	102	118	114.5	150909AN3
KF160WS	304 S.S.	190	153	174	165.5	150912AQ3

Half Nipple (Short)

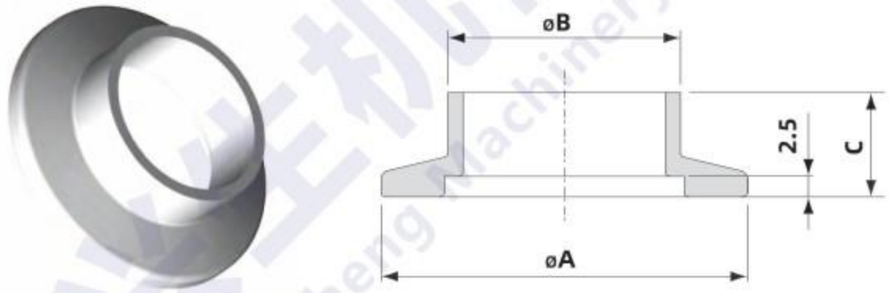

Model No.	Material	A	B	C	Available Area	Parts No.
KF10SHNSA	304 S.S.	30	12.7	12.7	U.S.A.	150301073
KF16SHNSA	304 S.S.	30	19.05	12.7	U.S.A.	150302093
KF25SHNSA	304 S.S.	40	25.4	12.7	U.S.A.	150303113
KF40SHNSA	304 S.S.	55	38.1	19.1	U.S.A.	150305133
KF50SHNSA	304 S.S.	75	50.8	19.1	U.S.A.	150306143
Special Sizes Available Upon Request						
KF10SHNSE	304 S.S.	30	14	30	Europe	150501AB3
KF16SHNSE	304 S.S.	30	20	30	Europe	150502AD3
KF25SHNSE	304 S.S.	40	28	30	Europe	150503AE3
KF40SHNSE	304 S.S.	55	45	30	Europe	150505AG3
KF50SHNSE	304 S.S.	75	57	30	Europe	150506AJ3
Special Sizes Available Upon Request						
KF25SHNSJ27	304 S.S.	40	27.2	20	Japan	150703AE3
KF40SHNSJ42	304 S.S.	55	42.7	20	Japan	150705AG3
KF50SHNSJ60	304 S.S.	75	60.5	20	Japan	150706AJ3

Dimension in mm unless otherwise noted

All information contained herein was current at time of publication, we reserve the right to change the design/specification for products improvement without notice.

Half Nipple (Long)

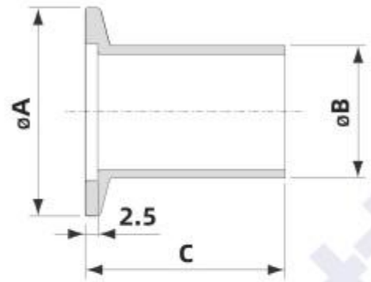

Model No.	Material	A	B	C	Available Area	Parts No.
KF10LHNSA	304 S.S.	30	12.7	40	U.S.A.	150401073
KF16LHNSA	304 S.S.	30	19.05	40	U.S.A.	150402093
KF25LHNSA	304 S.S.	40	25.4	40	U.S.A.	150403113
KF40LHNSA	304 S.S.	55	38.1	40	U.S.A.	150405133
KF50LHNSA	304 S.S.	75	50.8	40	U.S.A.	150406143
KF10LHNAA	Aluminum	30	12.7	40	U.S.A.	150401071
KF16LHNAA	Aluminum	30	19.05	40	U.S.A.	150402091
KF25LHNAA	Aluminum	40	25.4	40	U.S.A.	150403111
KF40LHNAA	Aluminum	55	38.1	40	U.S.A.	150405131
KF50LHNAA	Aluminum	75	50.8	40	U.S.A.	150406141
Special Sizes Available Upon Request						
KF10LHNSE	304 S.S.	30	14	70	Europe	150601AB3
KF16LHNSE	304 S.S.	30	20	70	Europe	150602AD3
KF25LHNSE	304 S.S.	40	28	70	Europe	150603AE3
KF40LHNSE	304 S.S.	55	45	70	Europe	150605AG3
KF50LHNSE	304 S.S.	75	57	70	Europe	150606AJ3
KF50LHNSJ	304 S.S.	75	60.5	40	Japan	150806AJ3

Half Nipple (Short for JIS Pipe)

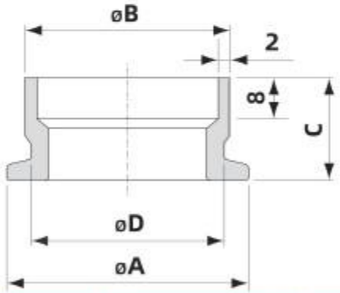

Model No.	Material	A	B	C	D	Available Area	Parts No.
KF25SHNSJ34	304 S.S.	40	34	20	32	Japan	150703AF3
KF40SHNSJ48	304 S.S.	55	48.6	20	45	Japan	150705AH3

Dimension in mm unless otherwise noted

All information contained herein was current at time of publication, we reserve the right to change the design/specification for products improvement without notice.

兴生机械科技
XingSheng Machinery Technology

01 KF SERIES

Half Nipple (Long for JIS Pipe)

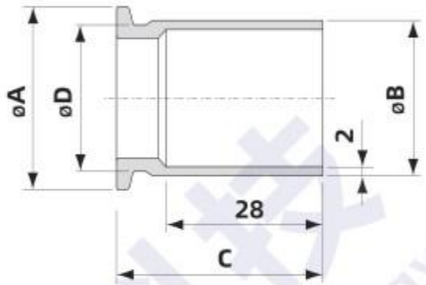

Model No.	Material	A	B	C	D	Available Area	Parts No.
KF25LHNSJ	304 S.S.	40	34	40	32	Japan	150803AF3
KF40LHNSJ	304 S.S.	55	48.6	40	45	Japan	150805AH3

Clamp

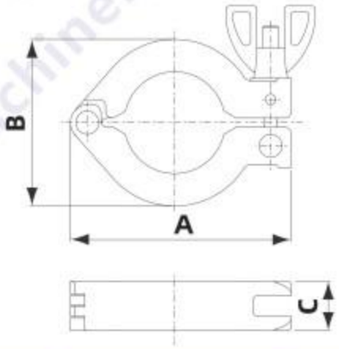

Model No.	Material	A	B	C	Surface Treatment	Parts No.
KF16CLA	Aluminum	63	42.5	16		21010511
KF25CLA	Aluminum	72	54	16		21010611
KF40CLA	Aluminum	90	70	16		21010811
KF50CLA	Aluminum	114	90	20		21010911
KF16CLA-NP	Aluminum	63	42.5	16	Nickel Plating	21010521
KF25CLA-NP	Aluminum	72	54	16	Nickel Plating	21010621
KF40CLA-NP	Aluminum	90	70	16	Nickel Plating	21010821
KF50CLA-NP	Aluminum	114	90	20	Nickel Plating	21010921

Dimension in mm unless otherwise noted

All information contained herein was current at time of publication, we reserve the right to change the design/specification for products improvement without notice.

Clamp-304S.S.

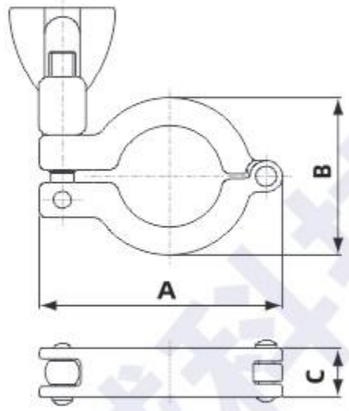

Model No.	Material	A	B	C	Parts No.
KF16CL-304	304 S.S.	59.5	36	15.5	21010541
KF25CL-304	304 S.S.	73.5	49	15.5	21010641
KF40CL-304	304 S.S.	90	64	16	21010841
KF50CL-304	304 S.S.	112	82	20	21010941

Spring Clamp

With plastic nut

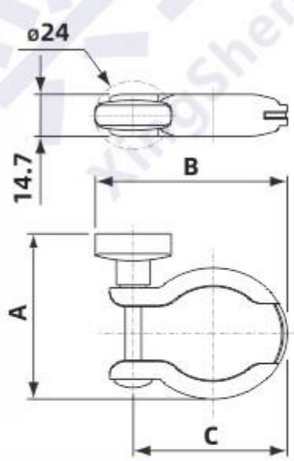

Features

- Light, low cost and without assembly space limit.
- Could change fasten nut on request.

Specifications

- Material :
  a. Body : 304S.S.
  b. Bolt : 304S.S.
  c. Plastic Nut : ABS.

Model No.	A	B	C	Parts No.
KF10SCLS	50	52	40	21090542
KF16SCLS	50	52	40	21090542
KF25SCLS	58	59	48	21090642
KF40SCLS	72	73	62	21090842

Dimension in mm unless otherwise noted

All information contained herein was current at time of publication, we reserve the right to change the design/specification for products improvement without notice.

兴生机械科技
XingSheng Machinery Technology

01 KF SERIES

Spring Clamp

With wing nut

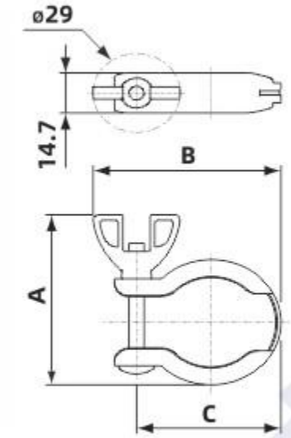

Features

- Light, low cost and without assembly space limit.
- Could change fasten nut on request.

Specifications

- Material :
  a. Body : 304S.S.
  b. Bolt : 304S.S.
  c. Wing Nut : 304S.S.

Model No.	A	B	C	Parts No.
KF10SCLSW	55	54	40	21090542S
KF16SCLSW	55	54	40	21090542S
KF25SCLSW	63	62	48	21090642S
KF40SCLSW	77	76	62	21090842S

Toggle Clamp

With Lock

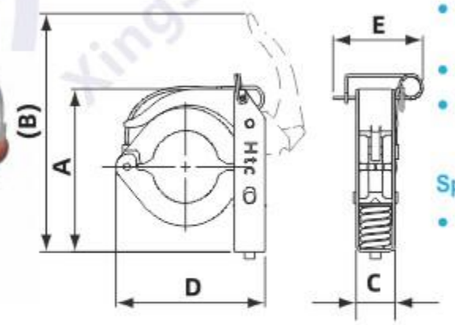

Features

- A lock pin can be inserted to prevent accidental release of the toggle lever.
- Easy for quick installation and uninstall.
- Self-adjusting clamp without manual over tightening.

Specifications

- Material :
  a. Body : Aluminum
  b. Pin : 304S.S.
  c. Spring seat : 304S.S.

Model No.	A	B	C	D	E	Parts No.
KF16TCLA	66	(97)	20	63	43	2107051A
KF25TCLA	75	(106)	20	74	43	2107061A
KF40TCLA	85	(123)	20	90	43	2107081A
KF50TCLA	118	(165)	23	115	43	2107091A

Dimension in mm unless otherwise noted

All information contained herein was current at time of publication, we reserve the right to change the design/specification for products improvement without notice.

KF Chain Clamps (KF16~KF63)

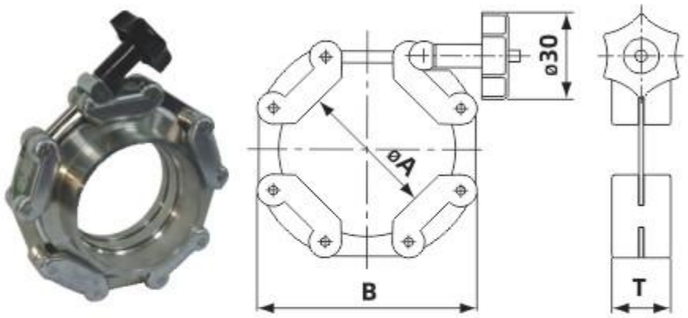

Features

- Links constructed of pressure die-cast aluminum alloy.
- Quick opening and closing of clamp.
- Clamp design allows for high-sealing forces.

Model No.	Flange size	Material	A	B	T	Part No.
CC-N-16	KF10/KF16	Block Aluminum	22	56	20.3	21020511
CC-N-25	KF25	Block Aluminum	32	66	20.3	21020611
CC-N-40	KF40	Block Aluminum	46	80	20.3	21020811
CC-N-50	KF50	Block Aluminum	69	100	20.3	21020911
CC-N-63	KF63	Block Aluminum	78	112	20.3	21021011

KF Chain Clamps (KF80~KF200)

Features

- Links constructed of pressure die-cast aluminum alloy.
- Pins & Links constructed of stainless steel.
- Quick opening and closing of clamp.
- Clamp design allows for high-sealing forces.

Model No.	Flange size	Material	A	B	T	Part No.
CC-N-80	KF80	Block Aluminum	165	99.8	37.1	21021111
CC-N-100	KF100	Block Aluminum	185	120.7	37.1	21021211
CC-N-125	KF125	Block Aluminum	210	149.5	37.1	21021311
CC-N-160	KF160	Block Aluminum	235	177.5	37.1	21021511
CC-N-200	KF200	Block Aluminum	300	240.3	37.1	21021611

Dimension in mm unless otherwise noted

All information contained herein was current at time of publication, we reserve the right to change the design/specification for products improvement without notice.

兴生机械科技
XingSheng Machinery Technology

01 KF SERIES

Bulkhead Clamp

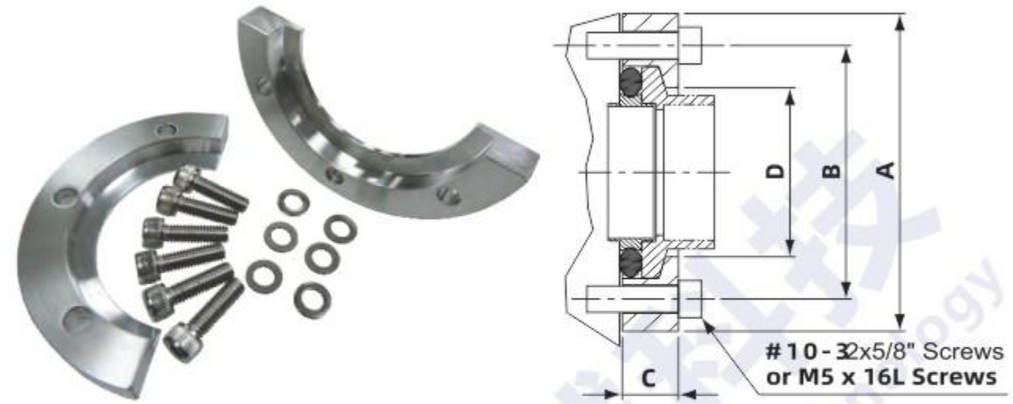

These aluminum Bulkhead Clamps are used to fasten KF flanges to vacuum process systems. Adapts to baseplates or flat walls with six or eight #10-32 UNF(or M5x16L) threaded bolt holes on the mounting surface. The clamp is aligned with the standard KF seal assembly (a KF flange and a centering ring with O'ring) and fastened to the mating bolt holes to form the vacuum seal between the connecting pairs.
The standard sizes for Bulkhead Clamps are KF-10, KF-16, KF-25, KF-40, and KF-50.

Model No.	Material	A	B	C	D	Bolt Size* No	Parts No.
NW-16-BCP	A6061-T6	50.8	38.1	9.17	22.86	#10-32x5/8" L*6	ZCP006A0220100
NW-25-BCP	A6061-T6	60.2	48.01	9.83	32	#10-32x5/8" L*6	ZCP006A0220200
NW-40-BCP	A6061-T6	74.68	61.98	9.3	46.22	#10-32x5/8" L*6	ZCP006A0220300
NW-50-BCP	A6061-T6	95.25	82.6	10.26	59.69	#10-32x5/8" L*8	ZCP006A0220400
NW-16-BCP-M	A6061-T6	50.8	38.1	9.17	22.86	M5x16L*6	ZCP274A0060100
NW-25-BCP-M	A6061-T6	60.2	48.01	9.83	32	M5x16L*6	ZCP274A0060200
NW-40-BCP-M	A6061-T6	74.68	61.98	9.3	46.22	M5x16L*6	XCB069A0150300
NW-50-BCP-M	A6061-T6	95.25	82.6	10.26	59.69	M5x16L*8	ZCP274A0060300

The part numbers in the table exclude the bolts.

Dimension in mm unless otherwise noted

All information contained herein was current at time of publication, we reserve the right to change the design/specification for products improvement without notice.

Nail Clamp

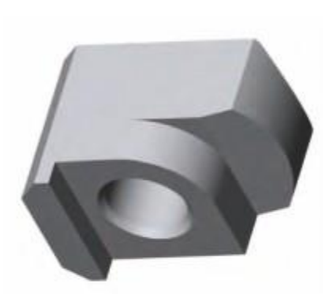

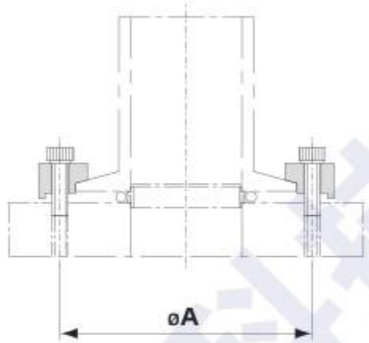

Model No.	Material	A	Bolt Size	Fits Size	Quantity	Parts No.
KF-NCA	Aluminum	43	M6*20L	KF10	3	2103A111
KF-NCA	Aluminum	43	M6*20L	KF16	3	2103A111
KF-NCA	Aluminum	53	M6*20L	KF25	4	2103A111
KF-NCA	Aluminum	68	M6*20L	KF40	4	2103A111
KF-NCA	Aluminum	88	M6*20L	KF50	6	2103A111

Cap

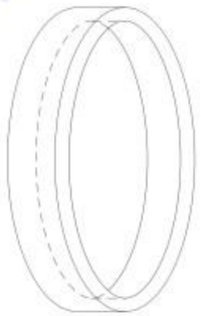

Model No.	Material	A	Parts No.
KF10CAP	Polyethylene	KF10	5085DG
KF16CAP	Polyethylene	KF16	5085DG
KF25CAP	Polyethylene	KF25	5085DY
KF40CAP	Polyethylene	KF40	5085EJ
KF50CAP	Polyethylene	KF50	5085FD
KF63CAP	Polyethylene	KF63	5085FX
KF80CAP	Polyethylene	KF80	5085H3
KF100CAP	Polyethylene	KF100	5085HX

Dimension in mm unless otherwise noted
All information contained herein was current at time of publication, we reserve the right to change the design/specification for products improvement without notice.

兴生机械科技
XingSheng Machinery Technology

01 KF SERIES

KF Braided Flexible Hoses

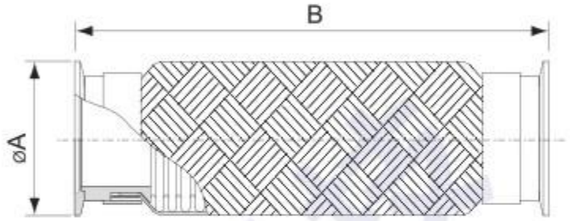

Model No.	Material	A	B	Parts No.
KF16BFX250	304 S.S.	30	250	40210550250AA
KF16BFX500	304 S.S.	30	500	40210550500AA
KF16BFX750	304 S.S.	30	750	40210550750AA
KF16BFX1000	304 S.S.	30	1000	40210551000AA
KF25BFX250	304 S.S.	40	250	40210560250AA
KF25BFX500	304 S.S.	40	500	40210560500AA
KF25BFX750	304 S.S.	40	750	40210560750AA
KF25BFX1000	304 S.S.	40	1000	40210561000AA
KF40BFX250	304 S.S.	55	250	40210570250AA
KF40BFX500	304 S.S.	55	500	40210570500AA
KF40BFX750	304 S.S.	55	750	40210570750AA
KF40BFX1000	304 S.S.	55	1000	40210571000AA
KF50BFX250	304 S.S.	75	250	40210580250AA
KF50BFX500	304 S.S.	75	500	40210580500AA
KF50BFX750	304 S.S.	75	750	40210580750AA
KF50BFX1000	304 S.S.	75	1000	40210581000AA

Dimension in mm unless otherwise noted
All information contained herein was current at time of publication, we reserve the right to change the design/specification for products improvement without notice.

KF Flexible Hoses

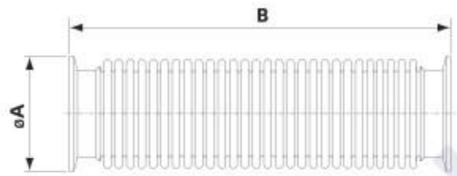

Model No.	Material	A	B	Parts No.
KF16FX250	304 S.S.	30	250	40010550250AA
KF16FX500	304 S.S.	30	500	40010550500AA
KF16FX750	304 S.S.	30	750	40010550750AA
KF16FX1000	304 S.S.	30	1000	40010551000AA
KF25FX250	304 S.S.	40	250	40010560250AA
KF25FX500	304 S.S.	40	500	40010560500AA
KF25FX750	304 S,S,	40	750	40010560750AA
KF25FX1000	304 S.S.	40	1000	40010561000AA
KF40FX250	304 S.S.	55	250	40010570250AA
KF40FX500	304 S.S.	55	500	40010570500AA
KF40FX750	304 S.S.	55	750	40010570750AA
KF40FX1000	304 S.S.	55	1000	40010571000AA
KF50FX250	304 S.S.	75	250	40010580250AA
KF50FX500	304 S.S.	75	500	40010580500AA
KF50FX750	304 S.S.	75	750	40010580750AA
KF50FX1000	304 S.S.	75	1000	40010581000AA

Dimension in mm unless otherwise noted

All information contained herein was current at time of publication, we reserve the right to change the design/specification for products improvement without notice.

兴生机械科技
XingSheng Machinery Technology

01 KF SERIES

KF Compressible Bellows Connections

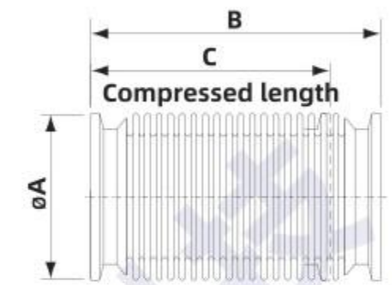

Model No.	Material	A	B	C	Parts No.
KF10FXC100	304 S.S.	30	100	80	40310410100AA
KF16FXC100	304 S.S.	30	100	80	40310430100AA
KF25FXC100	304 S.S.	40	100	80	40310440100AA
KF40FXC100	304 S.S.	55	100	80	40310450100AA
KF50FXC100	304 S.S.	75	100	80	40310460100AA

KF Flexible Hoses

Teflon Bellows

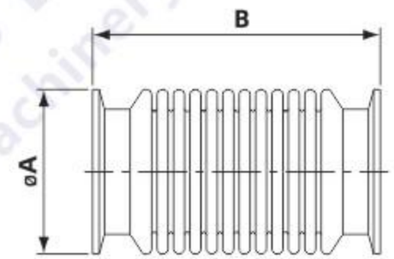

Model No.	Material	A	B	Parts No.
KF40FX100T	TEFLON	55	100	42001670100AA
KF50FX100T	TEFLON	75	100	42001680100AA

Teflon bellows with Metal flange frame

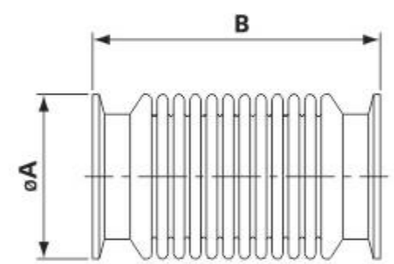

Model No.	Material	A	B	Parts No.
KF40FX100TS	TEFLON	55	100	42021670100AA
KF50FX100TS	TEFLON	75	100	42021680100AA

Dimension in mm unless otherwise noted

All information contained herein was current at time of publication, we reserve the right to change the design/specification for products improvement without notice.

KF Full Nipples

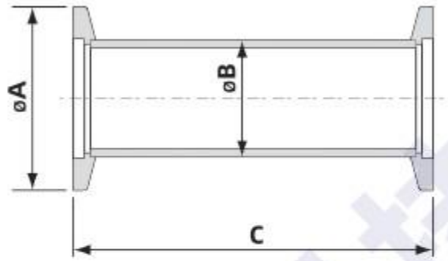

Model No.	Material	A	B	C	Parts No.
KF16N80	304 S.S.	30	19.05	80	160110210200804
KF25N100	304 S.S.	40	25.4	100	160110310301004
KF40N130	304 S.S.	55	38.1	130	160110510501304
KF50N140	304 S.S.	75	50.8	140	160110610601404

KF 90° Elbows

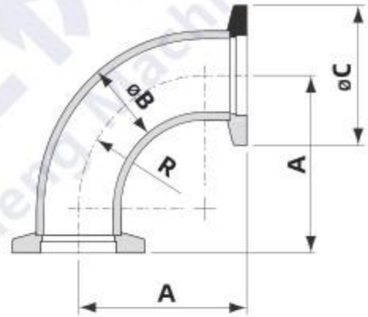

Model No.	Material	A	B	C	D	Available Area	Parts No.
KF16EL90A	304 S.S.	38.3	19.05	30	28.6	U.S.A.	16031021024
KF25EL90A	304 S.S.	56.2	25.4	40	38.1	U.S.A.	16031031034
KF40EL90A	304 S.S.	78.4	38.1	55	57.2	U.S.A.	16031051054
KF50EL90A	304 S.S.	107	50.8	75	76.2	U.S.A.	16031061064
KF16EL90E	304 S.S.	40	19.05	30	28.6	Europe	16041021024
KF25EL90E	304 S.S.	50.8	25.4	40	38.1	Europe	16041031034
KF40EL90E	304 S.S.	65	38.1	55	57.2	Europe	16041051054
KF50EL90E	304 S.S.	80	50.8	75	76.2	Europe	16041061064

* Special Size Available Upon Request.
* Part number plus "K" for sand blasting surface
* Part number plus "L" for polished surface

Dimension in mm unless otherwise noted
All information contained herein was current at time of publication, we reserve the right to change the design/specification for products improvement without notice.

兴生机械科技
XingSheng Machinery Technology

01 KF SERIES

KF 90° Elbows-Aluminum

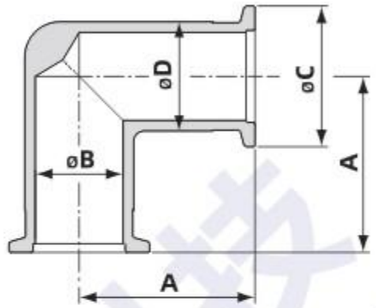

Model No.	Material	A	B	C	D	Available Area	Parts No.
KF16EL90AL	AL6082	40	16	30	21	Europe	16041021029S
KF25EL90AL	AL6082	50	25	40	31	Europe	16041031039S
KF40EL90AL	AL6082	65	39	55	45	Europe	16041051059S

KF Tees

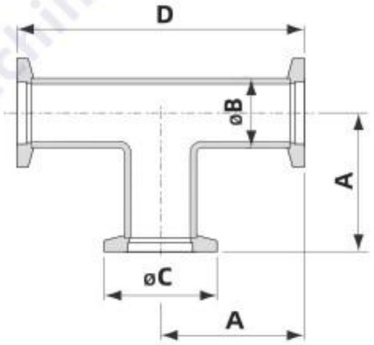

Model No.	Material	A	B	C	D	Available Area	Parts No.
KF16TA	304 S.S.	38.3	19.05	30	76.6	U.S.A.	16151021024
KF25TA	304 S.S.	51.4	25.4	40	102.8	U.S.A.	16151031034
KF40TA	304 S.S.	61	38.1	55	122	U.S.A.	16151051054
KF50TA	304 S.S.	80	50.8	75	160	U.S.A.	16151061064
KF16TE	304 S.S.	40	19.05	30	80	Europe	16161021024
KF25TE	304 S.S.	50	25.4	40	100	Europe	16161031034
KF40TE	304 S.S.	65	38.1	55	130	Europe	16161051054
KF50TE	304 S.S.	70	50.8	75	140	Europe	16161061064

* Special Size Available Upon Request.
* Part number plus "K" for sand blasting surface
* Part number plus "L" for polished surface

Dimension in mm unless otherwise noted
All information contained herein was current at time of publication, we reserve the right to change the design/specification for products improvement without notice.

KF Tees-Aluminum

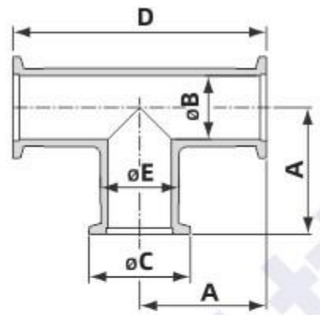

Model No.	Material	A	B	C	D	E	Available Area	Parts No.
KF16TEAL	AL6082	40	16	30	80	21	Europe	16161021029S
KF25TEAL	AL6082	50	25	40	100	31	Europe	16161031039S
KF40TEAL	AL6082	65	39	55	130	45	Europe	16161051059S

KF Unequal Tees

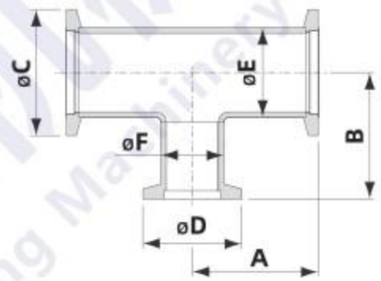

Model No.	Material	A	B	C	D	E	F	Available Area	Parts No.
KF25UT16A	304 S.S.	52	37.5	40	30	25.4	19.05	U.S.A.	16171031024
KF40UT16A	304 S.S.	61	52	55	30	38.1	19.05	U.S.A.	16171051024
KF40UT25A	304 S.S.	61	57.8	55	40	38.1	25.4	U.S.A.	16171051034
KF50UT16A	304 S.S.	80	58.2	75	30	50.8	19.05	U.S.A.	16171061024
KF50UT25A	304 S.S.	80	64.1	75	40	50.8	25.4	U.S.A.	16171061034
KF50UT40A	304 S.S.	80	67.3	75	55	50.8	38.1	U.S.A.	16171061054
KF25UT16E	304 S.S.	50	40	40	30	25.4	19.05	Europe	16181031024
KF40UT16E	304 S.S.	65	40	55	30	38.1	19.05	Europe	16181051024
KF40UT25E	304 S.S.	65	50	55	40	38.1	25.4	Europe	16181051034
KF50UT16E	304 S.S.	70	50	75	30	50.8	19.05	Europe	16181061024
KF50UT25E	304 S.S.	70	65	75	40	50.8	25.4	Europe	16181061034
KF50UT40E	304 S.S	70	65	75	55	50.8	38.10	Europe	16181061054

* Special Size Available Upon Request.
* Part number plus "K" for sand blasting surface
* Part number plus "L" for polished surface

Dimension in mm unless otherwise noted

All information contained herein was current at time of publication, we reserve the right to change the design/specification for products improvement without notice.

兴生机械科技
XingSheng Machinery Technology

01 KF SERIES

KF 4-Way Crosses

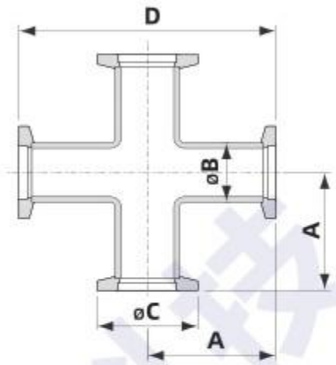

Model No.	Material	A	B	C	D	Available Area	Parts No.
KF16XA	304 S.S.	38.3	19.05	30	76.6	U.S.A.	16191021024
KF25XA	304 S.S.	51.4	25.4	40	102.8	U.S.A.	16191031034
KF40XA	304 S.S.	61	38.1	55	122	U.S.A.	16191051054
KF50XA	304 S.S.	80	50.8	75	160	U.S.A.	16191061064
KF16XE	304 S.S.	40	19.05	30	80	Europe	16201021024
KF25XE	304 S.S.	50	25.4	40	100	Europe	16201031034
KF40XE	304 S.S.	65	38.1	55	130	Europe	16201051054
KF50XE	304 S.S.	70	50.8	75	140	Europe	16201061064

* Special Size Available Upon Request.
* Part number plus "K" for sand blasting surface
* Part number plus "L" for polished surface

KF Five-Way Crosses

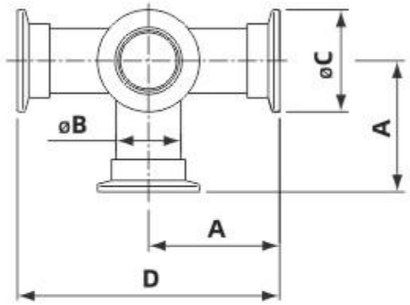

Model No.	Material	A	B	C	D	Parts No.
KF16FXA	304 S.S.	38.3	19.05	30	76.6	16261021024
KF25FXA	304 S.S.	51.4	25.4	40	102.8	16261031034
KF40FXA	304 S.S.	61	38.1	55	122	16261051054
KF50FXA	304 S.S.	80	50.8	75	160	16261061064

* Part number plus "K" for sand blasting surface
* Part number plus "L" for polished surface

Dimension in mm unless otherwise noted

All information contained herein was current at time of publication, we reserve the right to change the design/specification for products improvement without notice.

KF Six-Way Crosses

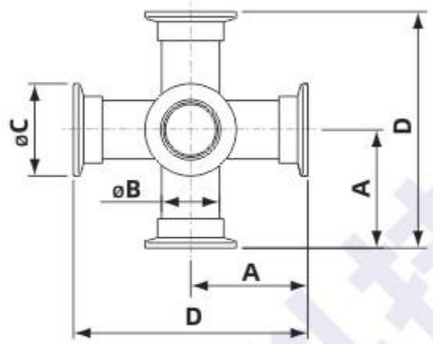

Model No.	Material	A	B	C	D	Parts No.
KF16SXA	304 S.S.	38.3	19.05	30	76.6	16281021024
KF25SXA	304 S.S.	51.4	25.4	40	102.8	16281031034
KF40SXA	304 S.S.	61	38.1	55	122	16281051054
KF50SXA	304 S.S.	80	50.8	75	160	16281061064

* Part number plus "K" for sand blasting surface
* Part number plus "L" for polished surface

KF Centering Ring

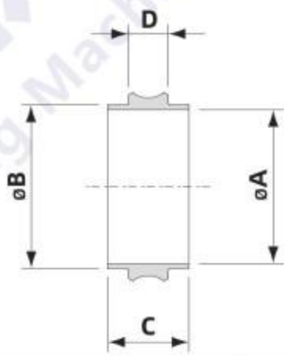

Model No.	Material	A	B	C	D	Parts No.
KF10CRS	304 S.S.	10	12	8	3.9	180003410
KF16CRS	304 S.S.	16	17	8	3.9	180005410
KF25CRS	304 S.S.	25	26	8	3.9	180006410
KF40CRS	304 S.S.	40	41	8	3.9	180008410
KF50CRS	304 S.S.	50	52	8	3.9	180009410
KF10CRA	Al	10	12	8	3.9	180003110
KF16CRA	Al	16	17	8	3.9	180005110
KF25CRA	Al	25	26	8	3.9	180006110
KF40CRA	Al	40	41	8	3.9	180008110
KF50CRA	Al	50	52	8	3.9	180009110

Dimension in mm unless otherwise noted

All information contained herein was current at time of publication, we reserve the right to change the design/specification for products improvement without notice.

兴生机械科技
XingSheng Machinery Technology

01 KF SERIES

KF Centering Ring with O'Ring

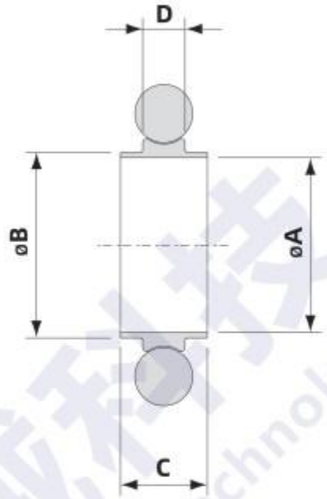

Model No.	Material C/R	Material O'Ring	A	B	C	D	O'Ring Size	Parts No.
KF10CRVS	304 S.S.	Viton	10	12	8	3.9	AS-311	180103411
KF16CRVS	304 S.S.	Viton	16	17	8	3.9	AS-314	180105411
KF25CRVS	304 S.S.	Viton	25	26	8	3.9	AS-320	180106411
KF40CRVS	304 S.S.	Viton	40	41	8	3.9	AS-326	180108411
KF50CRVS	304 S.S.	Viton	50	52	8	3.9	AS-330	180109411
KF10CRVA	Al	Viton	10	12	8	3.9	AS-311	180103111
KF16CRVA	Al	Viton	16	17	8	3.9	AS-314	180105111
KF25CRVA	Al	Viton	25	26	8	3.9	AS-320	180106111
KF40CRVA	Al	Viton	40	41	8	3.9	AS-326	180108111
KF50CRVA	Al	Viton	50	52	8	3.9	AS-330	180109111
KF10CRNS	304 S.S.	NBR	10	12	8	3.9	AS-311	180303412
KF16CRNS	304 S.S.	NBR	16	17	8	3.9	AS-314	180305412
KF25CRNS	304 S.S.	NBR	25	26	8	3.9	AS-320	180306412
KF40CRNS	304 S.S.	NBR	40	41	8	3.9	AS-326	180308412
KF50CRNS	304 S.S.	NBR	50	52	8	3.9	AS-330	180309412
KF10CRNA	Al	NBR	10	12	8	3.9	AS-311	180303112
KF16CRNA	Al	NBR	16	17	8	3.9	AS-314	180305112
KF25CRNA	Al	NBR	25	26	8	3.9	AS-320	180306112
KF40CRNA	Al	NBR	40	41	8	3.9	AS-326	180308112
KF50CRNA	Al	NBR	50	52	8	3.9	AS-330	180309112

* O'Ring color for NBR material is black, brown is available upon request.
* O'Ring color for Viton material is brown, black is available upon request.

Dimension in mm unless otherwise noted

All information contained herein was current at time of publication, we reserve the right to change the design/specification for products improvement without notice.

KF Centering Ring with Outer Ring & O'Ring

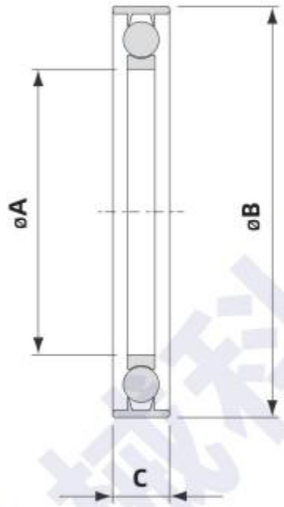

Model No.	Material C/R	Material O/R	Material O'Ring	A	B	C	O'Ring Size	Parts No.
KF16OCRVS	304 S.S.	Al	Viton	16	32.5	8	5018	181105421
KF25OCRVS	304 S.S.	Al	Viton	25	42.5	8	5028	181106421
KF40OCRVS	304 S.S.	Al	Viton	40	57.5	8	5042	181108421
KF50OCRVS	304 S.S.	Al	Viton	50	77.5	8	AS-330	181109421
KF16OCRV-316	316 S.S.	Al	Viton	16	32.5	8	5018	181105621
KF25OCRV-316	316 S.S.	Al	Viton	25	42.5	8	5028	181106621
KF40OCRV-316	316 S.S.	Al	Viton	40	57.5	8	5042	181108621
KF50OCRV-316	316 S.S.	Al	Viton	50	77.5	8	AS-330	181109621

* O'Ring color is brown, black is available upon request.

Dimension in mm unless otherwise noted

All information contained herein was current at time of publication, we reserve the right to change the design/specification for products improvement without notice.

兴生机械科技
XingSheng Machinery Technology

01 KF SERIES

KF Centering Ring Adaptor & O'Ring

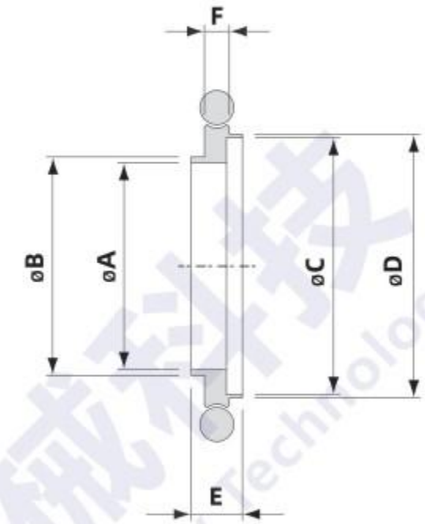

Model No.	Material C/R	Material O'Ring	A	B	C	D	E	F	O'Ring Size	Parts No.
KF10CR16VS	304 S.S.	Viton	10	12	16	17	8	3.9	AS-314	19011A411
KF20CR25VS	304 S.S.	Viton	20	22	25	26	8	3.9	AS-320	19011B411
KF32CR40VS	304 S.S.	Viton	32	34	40	41	8	3.9	AS-326	19011C411
KF10CR16VA	Al	Viton	10	12	16	17	8	3.9	AS-314	19011A111
KF20CR25VA	Al	Viton	20	22	25	26	8	3.9	AS-320	19011B111
KF32CR40VA	Al	Viton	32	34	40	41	8	3.9	AS-326	19011C111
KF10CR16NS	304 S.S.	NBR	10	12	16	17	8	3.9	AS-314	19031A412
KF20CR25NS	304 S.S.	NBR	20	22	25	26	8	3.9	AS-320	19031B412
KF32CR40NS	304 S.S.	NBR	32	34	40	41	8	3.9	AS-326	19031C412
KF10CR16NA	Al	NBR	10	12	16	17	8	3.9	AS-314	19031A112
KF20CR25NA	Al	NBR	20	22	25	26	8	3.9	AS-320	19031B112
KF32CR40NA	Al	NBR	32	34	40	41	8	3.9	AS-326	19031C112

* O'Ring color for NBR material is black, brown is available upon request.
* O'Ring color for Viton material is brown, black is available upon request.

Dimension in mm unless otherwise noted

All information contained herein was current at time of publication, we reserve the right to change the design/specification for products improvement without notice.

KF Meshed Centering Ring

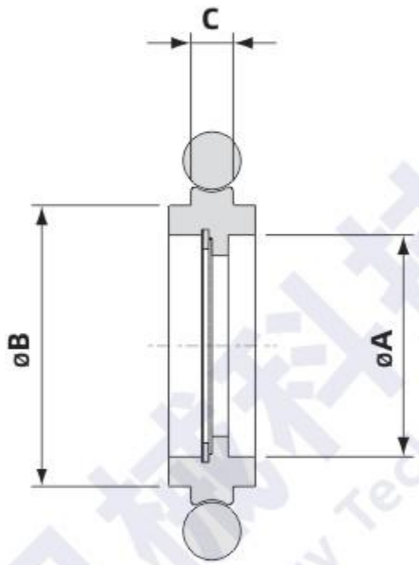

Model No.	Material C/R	Material O'Ring	Mesh/In²	A	B	C	O'Ring Size	Parts No.
KF16M3CRVS	304 S.S.	Viton	900	12	17	3.9	AS-314	183105411
KF25M3CRVS	304 S.S.	Viton	900	20.5	26	3.9	AS-320	183106411
KF40M3CRVS	304 S.S.	Viton	900	35.8	41	3.9	AS-326	183108411
KF50M3CRVS	304 S.S.	Viton	900	46.3	52	3.9	AS-330	183109411
KF63M3CRVS	304 S.S.	Viton	900	60.5	69.6	3.9	AS-337	183110411
KF80M3CRVS	304 S.S.	Viton	900	73.6	82.6	3.9	AS-341	183111411
KF100M3CRVS	304 S.S.	Viton	900	91.8	101.6	3.9	AS-347	183112411
KF16M3CRNS	304 S.S.	NBR	900	12	17	3.9	AS-314	183305412
KF25M3CRNS	304 S.S.	NBR	900	20.5	26	3.9	AS-320	183306412
KF40M3CRNS	304 S.S.	NBR	900	35.8	41	3.9	AS-326	183308412
KF50M3CRNS	304 S.S.	NBR	900	46.3	52	3.9	AS-330	183309412
KF63M3CRNS	304 S.S.	NBR	900	60.5	69.6	3.9	AS-337	183310412
KF80M3CRNS	304 S.S.	NBR	900	73.6	82.6	3.9	AS-341	183311412
KF100M3CRNS	304 S.S.	NBR	900	91.8	101.6	3.9	AS-347	183312412

* O'Ring color for NBR material is black, brown is available upon request.
* O'Ring color for Viton material is brown, black is available upon request.

Dimension in mm unless otherwise noted
All information contained herein was current at time of publication, we reserve the right to change the design/specification for products improvement without notice.

兴生机械科技
XingSheng Machinery Technology

01 KF SERIES

KF Overpressure Ring

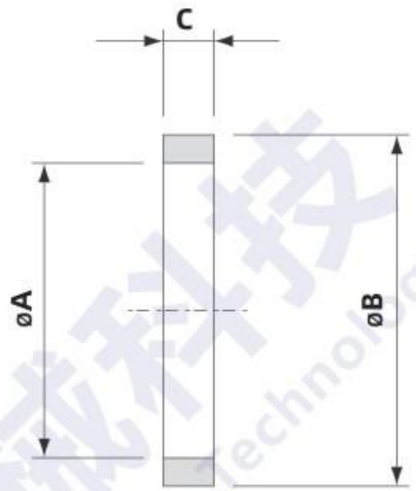

Model No.	Material	A	B	C	Parts No.
KF10OPR	304 S.S.	23.5	28	3.7	20000341
KF16OPR	304 S.S.	30.12	31.75	3.7	20000541
KF25OPR	304 S.S.	38.86	40.4	3.7	20000641
KF40OPR	304 S.S.	54	57.15	3.7	20000841
KF50OPR	304 S.S.	66.55	69.85	3.7	20000941
ISO63OPR	304 S.S.	87.1	93	3.9	20001041
ISO80OPR	304 S.S.	100.2	106	3.9	20001141
ISO100OPR	304 S.S.	119.3	125.3	3.9	20001241
ISO160OPR	304 S.S.	170.4	176.4	3.9	20001541

Dimension in mm unless otherwise noted
All information contained herein was current at time of publication, we reserve the right to change the design/specification for products improvement without notice.

02 ISO SERIES

General Information 2-2
Complete Clamp Assemblies 2-3
Application for ISO Components 2-5
Connections of ISO series Fittings 2-5
Center Ring 2-6
Blank 2-7
Bored Blank 2-7
ISO Bolted Blank 2-8
Bolted Flange 2-8
Bolted Flange-Tapped 2-9
Rotatable Bolt Ring 2-9
Half Nipple 2-10
Split Retainer Ring 2-10
Single Wall Clamp 2-11,12
Double Wall Clamp 2-12
Double Claw Clamp 2-13
Cap 2-14
ISO Flexible Hoses 2-15
ISO Compressible Bellows Connections 2-15
ISO Teflon Bellows 2-16
ISO Full Nipples 2-17
ISO 90° Elbows 2-17
ISO T ees 2-18
ISO 4-Way Crosses 2-18
ISO Five-Way Crosses 2-19
ISO Six-Way Crosses 2-19
ISO Centering Ring-Europe 2-20
ISO Centering Ring-USA 2-21
ISO Centering Ring with Viton O'Ring 2-22
ISO Centering Ring with NBR O'Ring 2-23
ISO Centering Ring with Viton O'Ring 2-24
ISO Centering Ring with NBR O'Ring 2-25
ISO Outer Ring Centering Ring & Viton O'Ring 2-26
ISO Outer Ring Centering Ring & NBR O'Ring 2-27
ISO Outer Ring Centering Ring & Viton O'Ring 2-28
ISO Outer Ring Centering Ring & NBR O'Ring 2-29

General Information

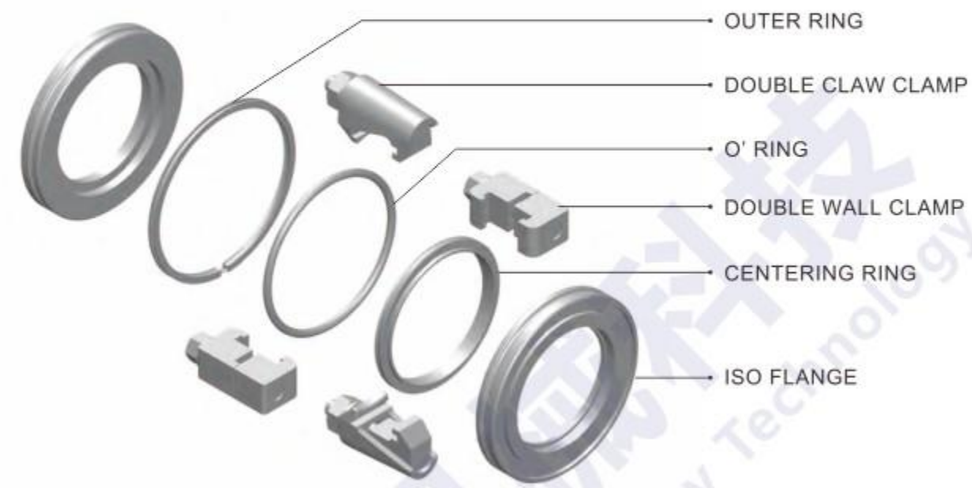

Features

- The components of ISO universal flange system are defined by the International Standards Organization (ISO).
- The construction of ISO flange series includes two smooth-faced sexless flanges clamped together with a combination metal centering ring and elastomeric O-ring between them.
- ISO components are reusable and changeable with other ISO dimension components of the same size.

Specifications

- Blanks & Flanges : 304 S.S. (Other material available upon request)
- Retainer Rings : 304 S.S. (Other material available upon request)
- Centering Rings : 304 S.S. (Other material available upon request)
- Outer Rings : Aluminum
- Clamps : Aluminum, Stainless steel, Steel plated
- Fastening torque : 1~1.4kg-m
- O'ring material : Viton or NBR
- Temperature Range : 150°C (Viton) 80°C (NBR)
- Vacuum Rate : $1*10^{-8}$ mbar

All information contained herein was current at time of publication, we reserve the right to change the design/specification for products improvement without notice.

Complete Clamp Assemblies

The system is versatile because of the many ways in which components can be assembled.

❶ Double Wall-Clamp or Double Claw Clamp

Illustrates the double wall (claw) clamp assembly to connect pairs of ISO flanges. Ease of use and economic make this the most commonly used configuration.

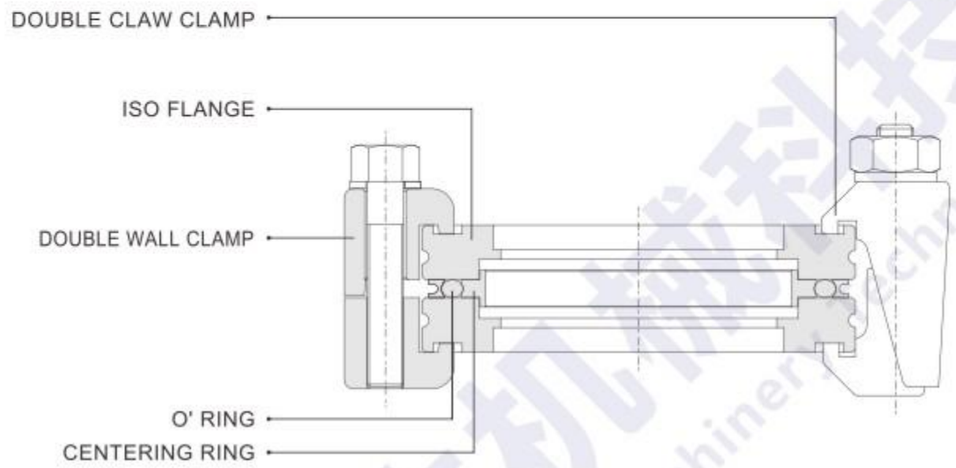

❷ Bolted Nonrotatable

The two bolt flanges connected in the normal way.

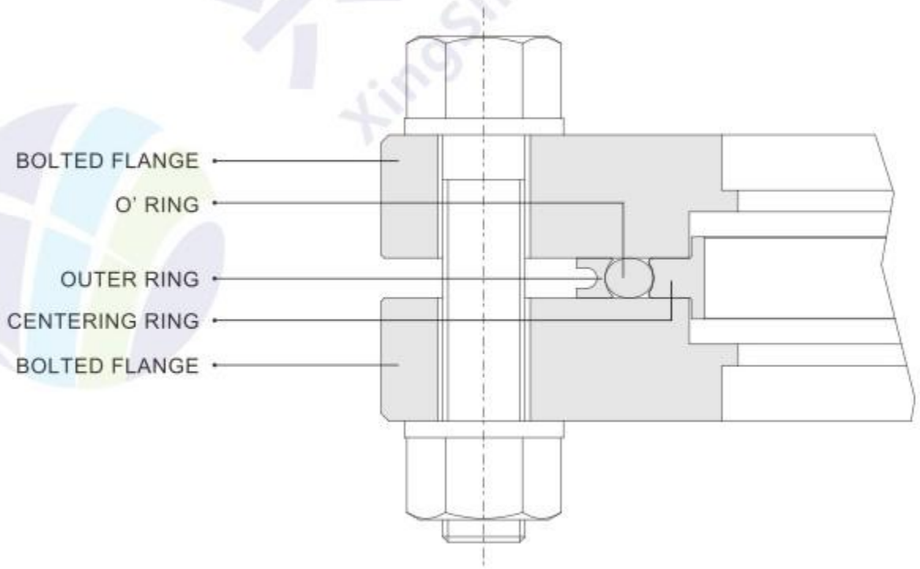

Dimension in mm unless otherwise noted
All information contained herein was current at time of publication, we reserve the right to change the design/specification for products improvement without notice.

兴生机械科技
XingSheng Machinery Technology

Complete Clamp Assemblies

❸ Single Wall Clamp

Single wall clamps are used to join an ISO flange to a tapped flange on a pump, chamber or gate valve.

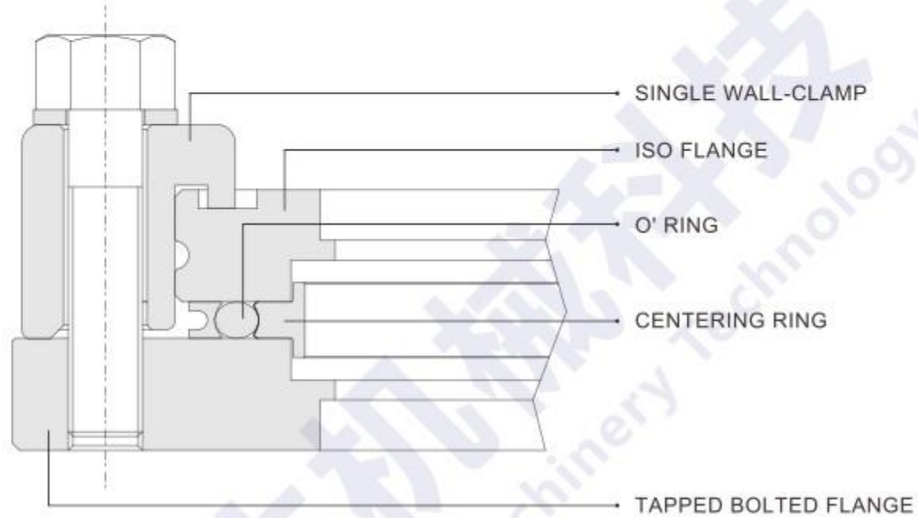

❹ Bolted Rotatable

This fastening method allows the ISO flange to be rotated for ease of component alignment. Additionally, a rotatable bolt ring can be used to fasten an ISO flange to a non-rotatable flange using bolt.

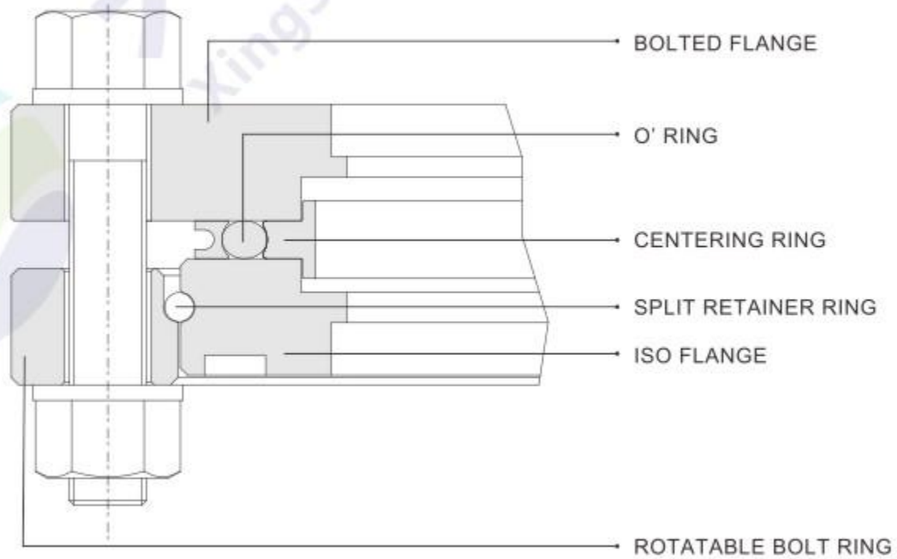

02 ISO SERIES

Dimension in mm unless otherwise noted
All information contained herein was current at time of publication, we reserve the right to change the design/specification for products improvement without notice.

Application for ISO Components

❶

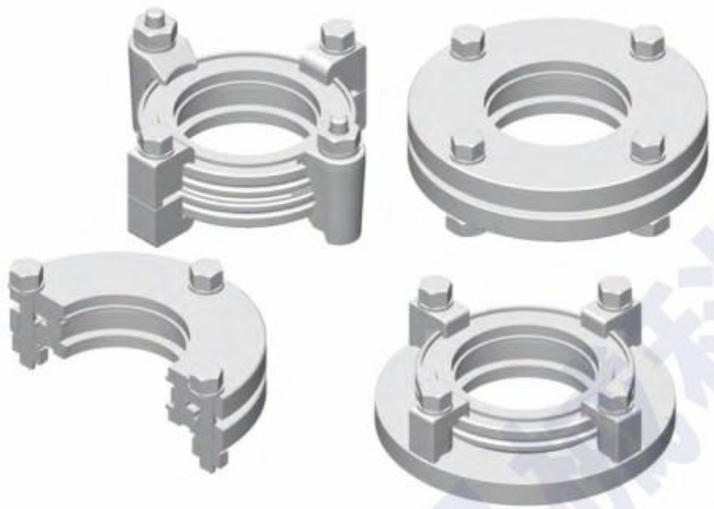

Applications for this system are as varied as the imagination can make them.
Some examples are:

❶ Roughing and foreline plumbing for large vacuum system.
❷ High vacuum, high conductance, inter-connections.
❸ Modular system which will be modified frequently.
❹ System requiring frequent cleaning.
❺ Experimental system in research laboratories.

Connections of ISO-series Fittings

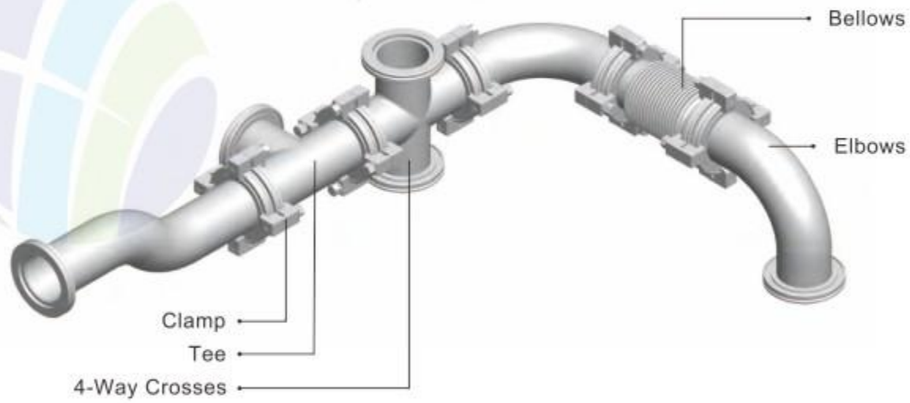

Dimension in mm unless otherwise noted
All information contained herein was current at time of publication, we reserve the right to change the design/specification for products improvement without notice.

兴生机械科技
XingSheng Machinery Technology

02 ISO SERIES

Center Ring

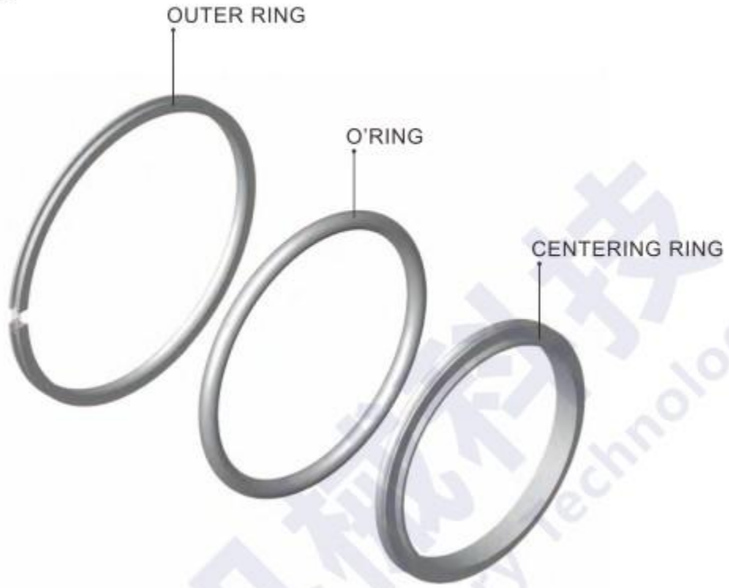

Features

- Viton O'ring bakeable to 200°C intermittently, sustained use to 150°C.
- Vacuum seal of KF-series: O'ring compression by uniform pressure application around the 15° outer flange surface.
- The vacuum seal of ISO-series is made by compressing the O'ring between the mating flanges. This done by alternately wrench-tightening opposing pairs of clamps or bolts until the first metal-to-metal contact is made between the inner surfaces of the flanges and the spacing lips of the centering ring.

Specifications

- Centering Ring : 304 S.S. (Other material available upon request)
- O'ring : Viton (Other material available upon request)
- Outer Ring : Aluminum
- Mesh : 304 S.S.
- Temperature Range : 150°C (Viton) 80°C (NBR)
- Larger or special size available upon request

Applications

- The O'ring is considered a universal sealing device.
  Used as static, dynamic, radial or face seals.
- Vacuum seal.

Dimension in mm unless otherwise noted
All information contained herein was current at time of publication, we reserve the right to change the design/specification for products improvement without notice.

Blank

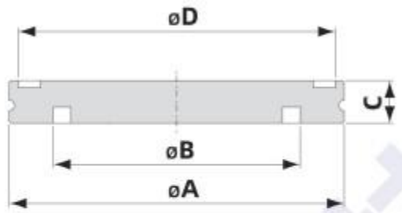

Model No.	Material	A	B	C	D	Parts No.
ISO63B	304 S.S.	95	70	12	90	152107003
ISO80B	304 S.S.	110	83	12	105	152108003
ISO100B	304 S.S.	130	102	12	125	152109003
ISO160B	304 S.S.	180	153	12	175	152112003
ISO200B	304 S.S.	240	213	12	235	152113003
ISO250B	304 S.S.	290	261	12	285	152114003
ISO320B	304 S.S.	370	318	17	365	152116003
ISO400B	304 S.S.	450	400	17	445	152118003
ISO500B	304 S.S.	550	501	17	545	152120003
ISO630B	304 S.S.	690	651	22	685	152122003

Bored Blank

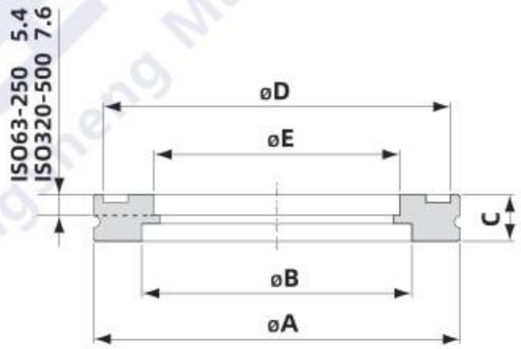

Model No.	Material	A	B	C	D	E	Parts No.
ISO63B63	304 S.S.	95	70	12	90	63.7	152207153
ISO80B76	304 S.S.	110	83	12	105	76.8	152208163
ISO100B102	304 S.S.	130	102	12	125	102.2	152209183
ISO160B153	304 S.S.	180	153	12	175	152.9	152212203
ISO200B204	304 S.S.	240	213	12	235	203.7	152213213
ISO250B255	304 S.S.	290	261	12	285	254.5	152214223
ISO320B305	304 S.S.	370	318	17	365	305.3	152216233
ISO400B407	304 S.S.	450	400	17	445	406.9	152218253
ISO500B509	304 S.S.	550	501	17	545	508.8	152220273

Dimension in mm unless otherwise noted

All information contained herein was current at time of publication, we reserve the right to change the design/specification for products improvement without notice.

兴生机械科技
XingSheng Machinery Technology

02 ISO SERIES

ISO Bolted Blank

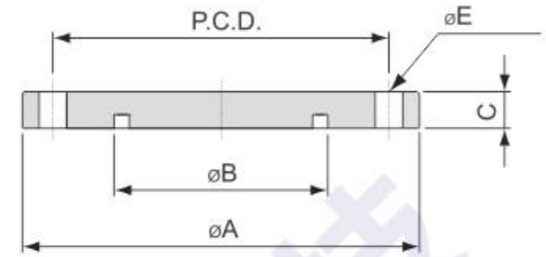

Model No.	Material	A	B	C	E*No	P.C.D.	Parts No.
ISO63BB	304 S.S.	130	70	12	9*4	110	152307003
ISO80BB	304 S.S.	145	83	12	9*8	125	152308003
ISO100BB	304 S.S.	165	102	12	9*8	145	152309003
ISO160BB	304 S.S.	225	153	16	11*8	200	152312003
ISO200BB	304 S.S.	285	213	16	11*12	260	152313003
ISO250BB	304 S.S.	335	261	16	11*12	310	152314003
ISO320BB	304 S.S.	425	318	20	14*12	395	152316003
ISO400BB	304 S.S.	510	400	20	14*16	480	152318003
ISO500BB	304 S.S.	610	501	20	14*16	580	152320003
ISO630BB	304 S.S.	750	651	24	14*20	720	152322003

Bolted Flange

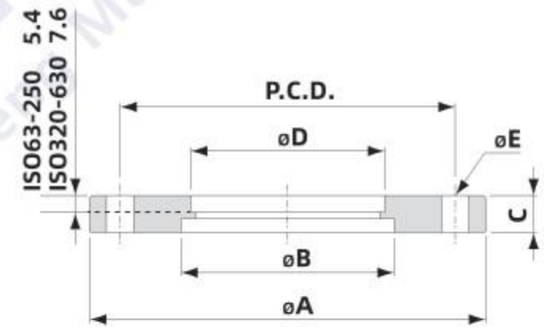

Model No.	Material	A	B	C	D	E*No.	P.C.D.	Parts No.
ISO63BF	304 S.S.	130	70	12	63.7	9*4	110	152307153
ISO80BF	304 S.S.	145	83	12	76.8	9*8	125	152308163
ISO100BF	304 S.S.	165	102	12	102.2	9*8	145	152309183
ISO160BF	304 S.S.	225	153	16	152.9	11*8	200	152312203
ISO200BF	304 S.S.	285	213	16	203.7	11*12	260	152313213
ISO250BF	304 S.S.	335	261	16	254.5	11*12	310	152314223
ISO320BF	304 S.S.	425	318	20	305.3	14*12	395	152316233
ISO400BF	304 S.S.	510	400	20	406.9	14*16	480	152318253
ISO500BF	304 S.S.	610	501	20	508.8	14*16	580	152320273
ISO630BF	304 S.S.	750	651	24	610.4	14*20	720	152322293

Dimension in mm unless otherwise noted

All information contained herein was current at time of publication, we reserve the right to change the design/specification for products improvement without notice.

Bolted Flange-Tapped

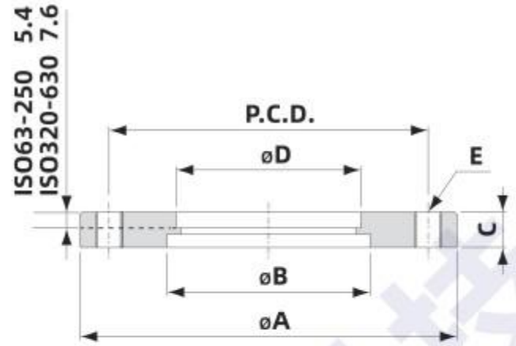

Model No.	Material	A	B	C	D	E*No.	P.C.D.	Parts No.
ISO63BFTAP	304 S.S.	130	70	12	63.7	M8*4	110	152407153
ISO80BFTAP	304 S.S.	145	83	12	76.8	M8*8	125	152408163
ISO100BFTAP	304 S.S.	165	102	12	102.2	M8*8	145	152409183
ISO160BFTAP	304 S.S.	225	153	16	152.9	M10*8	200	152412203
ISO200BFTAP	304 S.S.	285	213	16	203.7	M10*12	260	152413213
ISO250BFTAP	304 S.S.	335	261	16	254.5	M10*12	310	152414223
ISO320BFTAP	304 S.S.	425	318	20	305.3	M12*12	395	152416233
ISO400BFTAP	304 S.S.	510	400	20	406.9	M12*16	480	152418253
ISO500BFTAP	304 S.S.	610	501	20	508.8	M12*16	580	152420273
ISO630BFTAP	304 S.S.	750	651	24	610.4	M12*20	720	152422293

Rotatable Bolt Ring

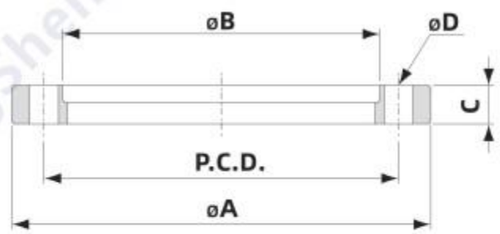

Model No.	Material	A	B	C	D*No.	P.C.D.	Parts No.
ISO63RBR	304 S.S.	130	98.5	12	9*4	110	152507073
ISO80RBR	304 S.S.	145	113.5	12	9*8	125	152508083
ISO100RBR	304 S.S.	165	133.5	12	9*8	145	152509093
ISO160RBR	304 S.S.	225	185.7	16	11*8	200	152512123
ISO200RBR	304 S.S.	285	245.7	16	11*12	260	152513133
ISO250RBR	304 S.S.	335	295.7	16	11*12	310	152514143
ISO320RBR	304 S.S.	425	375.8	20	14*12	395	152516163
ISO400RBR	304 S.S.	510	458.8	20	14*16	480	152518183
ISO500RBR	304 S.S.	610	558.8	20	14*16	580	152520203

Dimension in mm unless otherwise noted

All information contained herein was current at time of publication, we reserve the right to change the design/specification for products improvement without notice.

兴生机械科技
XingSheng Machinery Technology

02 ISO SERIES

Half Nipple

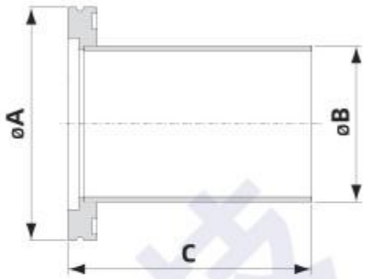

Model No.	Material	A	B	C	Parts No.
ISO63HN	304 S.S.	95	63.5	100	152607153
ISO80HN	304 S.S.	110	76.2	100	152608163
ISO100HN	304 S.S.	130	101.6	100	152609183
ISO160HN	304 S.S.	180	152.4	100	152612203
ISO200HN	304 S.S.	240	203.2	100	152613213
ISO250HN	304 S.S.	290	254	100	152614223
ISO320HN	304 S.S.	370	304.8	100	152616233
ISO400HN	304 S.S.	450	406.8	100	152618253
ISO500HN	304 S.S.	550	508	100	152620273

Split Retainer Ring

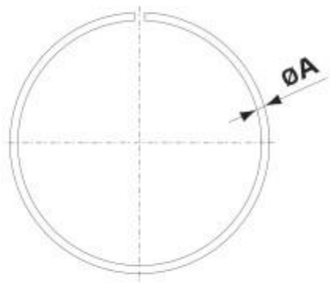

Model No.	Material	A	Fit Flange	Parts No.
ISO63SRR	304 S.S.	3	ISO63	20011041
ISO80SRR	304 S.S.	3	ISO80	20011141
ISO100SRR	304 S.S.	3	ISO100	20011241
ISO160SRR	304 S.S.	4.5	ISO160	20011541
ISO200SRR	304 S.S.	4.5	ISO200	20011641
ISO250SRR	304 S.S.	4.5	ISO250	20011741
ISO320SRR	304 S.S.	4.5	ISO320	20011941
ISO400SRR	304 S.S.	8	ISO400	20012141
ISO500SRR	304 S.S.	8	ISO500	20012341

Dimension in mm unless otherwise noted

All information contained herein was current at time of publication, we reserve the right to change the design/specification for products improvement without notice.

Single Wall Clamp

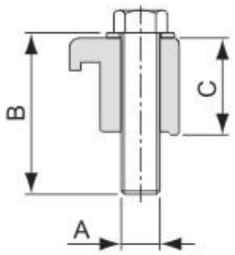

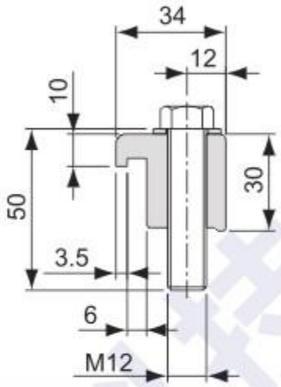

Model No.	Material	A	B	C	Fit Flange	Parts No.
ISO63-100SWC304	304 S.S.	M8	35	23	ISO63 ISO80 ISO100	2121A241
ISO160-250SWC304	304 S.S.	M10	35	23	ISO160 ISO200 ISO250	2121A441
ISO320-500SWC304	304 S.S.	M12	50	30	ISO320 ISO400 ISO500	2121A541
ISO63-100SWC-ZP	Steel+Zn Plated	M8	35	23	ISO63 ISO80 ISO100	2121A231
ISO160-250SWC-ZP	Steel+Zn Plated	M10	35	23	ISO160 ISO200 ISO250	2121A431
ISO320-500SWC-ZP	Steel+Zn Plated	M12	50	30	ISO320 ISO400 ISO500	2121A531

Dimension in mm unless otherwise noted

All information contained herein was current at time of publication, we reserve the right to change the design/specification for products improvement without notice.

兴生机械科技
XingSheng Machinery Technology

02 ISO SERIES

Single Wall Clamp

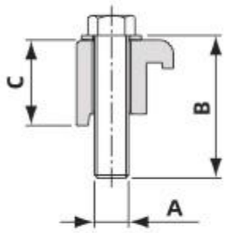

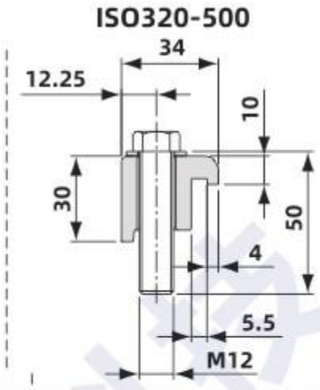

Model No.	Material	A	B	C	Fit Flange	Parts No.
ISO63-100SWCA	Aluminum	M8	35	23.5	ISO63 ISO80 ISO100	2121A211
ISO160-250SWCA	Aluminum	M10	35	23.5	ISO160 ISO200 ISO250	2121A411
ISO320-500SWCA	Aluminum	M12	50	30	ISO320 ISO400 ISO500	2121A511

Double Wall Clamp

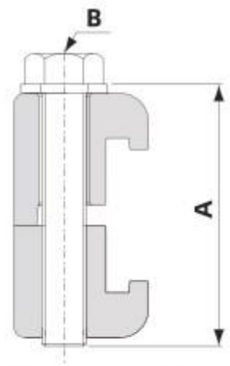

Model No.	Material	A	B	Min. Quantity	Fit Flange	Parts No.
ISO63-100DWCA	Aluminum	45	M8	4 4 4	ISO63 ISO80 ISO100	2122A211
ISO160-250DWCA	Aluminum	45	M10	4 6 6	ISO160 ISO200 ISO250	2122A411
ISO320-500DWCA	Aluminum	60	M12	8 8 12	ISO320 ISO400 ISO500	2122A511

Dimension in mm unless otherwise noted

All information contained herein was current at time of publication, we reserve the right to change the design/specification for products improvement without notice.

Double Claw Clamp

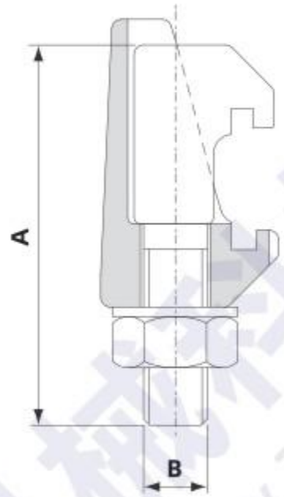

Model No.	Material	A	B	Min. Quantity	Fit Flange	Parts No.
				4	ISO63	
				4	ISO80	
ISO63-250DCC316	316 S.S.	61.5	M10	4	ISO100	2123A361
				4	ISO160	
				6	ISO200	
				6	ISO250	
				8	ISO320	
ISO320-500DCC316	316 S.S.	76	M12	8	ISO400	2123A561
				12	ISO500	
ISO630DCC316	316 S.S.	86	M12	12	ISO630	2123A661
				4	ISO63	
				4	ISO80	
ISO63-250DCC-ZP	Steel+Zn Plated	61.5	M10	4	ISO100	2123A331
				4	ISO160	
				6	ISO200	
				6	ISO250	
				8	ISO320	
ISO320-500DCC-ZP	Steel+Zn Plated	76	M12	8	ISO400	2123A531
				12	ISO500	
ISO630DCC-ZP	Steel+Zn Plated	86	M12	12	ISO630	2123A631

Dimension in mm unless otherwise noted

All information contained herein was current at time of publication, we reserve the right to change the design/specification for products improvement without notice.

兴生机械科技
XingSheng Machinery Technology

02 ISO SERIES

Cap

Model No.	Material	Fit Flange	Parts No.
ISO63CAP	Polyethylene	ISO63	5085G9
ISO80CAP	Polyethylene	ISO80	5085GU
ISO100CAP	Polyethylene	ISO100	5085HJ
ISO160CAP	Polyethylene	ISO160	5085JR
ISO200CAP	Polyethylene	ISO200	5085KU
ISO250CAP	Polyethylene	ISO250	5085LE
ISO320CAP	Polyethylene	ISO320	5085MA

Dimension in mm unless otherwise noted

All information contained herein was current at time of publication, we reserve the right to change the design/specification for products improvement without notice.

ISO Flexible Hoses

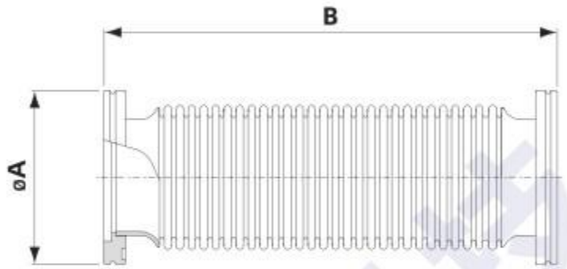

Model No.	Material	A	Fit Flange	Parts No.
ISO63FXC250	304 S.S.	95	250	40310670250BB
ISO63FXC500	304 S.S.	95	500	40310670500BB
ISO63FXC750	304 S.S.	95	750	40310670750BB
ISO63FXC1000	304 S.S.	95	1000	40310671000BB
ISO80FXC250	304 S.S.	110	250	40310680250BB
ISO80FXC500	304 S,S,	110	500	40310680500BB
ISO80FXC750	304 S.S.	110	750	40310680750BB
ISO80FXC1000	304 S.S.	110	1000	40310681000BB
ISO100FXC250	304 S.S.	130	250	40310690250BB
ISO100FXC500	304 S.S.	130	500	40310690500BB
ISO100FXC750	304 S.S.	130	750	40310690750BB
ISO100FXC1000	304 S.S.	130	1000	40310691000BB

ISO Compressible Bellows Connections

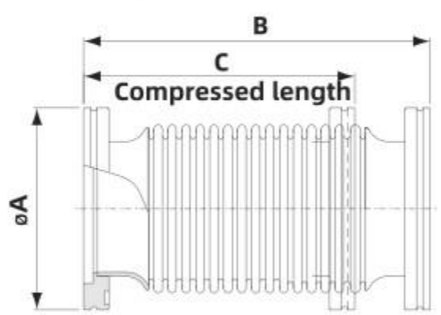

Model No.	Material	A	B	C	Parts No.
ISO63FXC140	304 S.S.	95	140	125	40310470140BB
ISO80FXC187	304 S.S.	110	187	160	40310480187BB
ISO100FXC187	304 S.S.	130	187	160	40310490187BB

Dimension in mm unless otherwise noted
All information contained herein was current at time of publication, we reserve the right to change the design/specification for products improvement without notice.

兴生机械科技
XingSheng Machinery Technology

02 ISO SERIES

ISO Flexible Hoses

Teflon Bellows

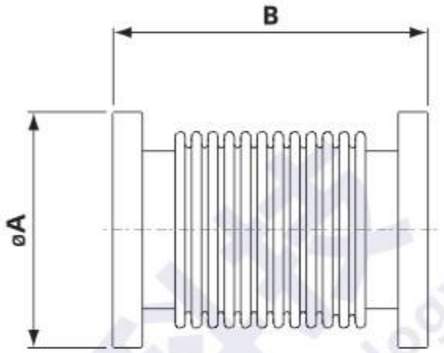

Model No.	Material	A	B	Parts No.
ISO80FX150T	TEFLON	110	150	42001700150BB

ISO Flexible Hoses

ISO Teflon bellows with Metal flange frame

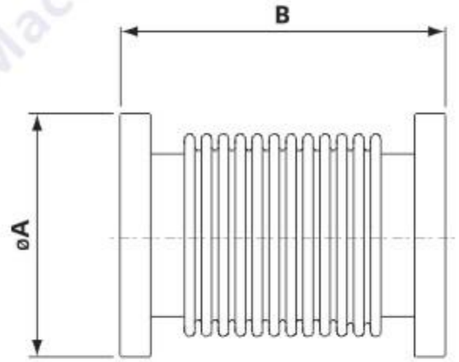

Model No.	Material	A	B	Parts No.
ISO80FX180TS	TEFLON	110	180	42021700180BB

Dimension in mm unless otherwise noted
All information contained herein was current at time of publication, we reserve the right to change the design/specification for products improvement without notice.

ISO Full Nipples

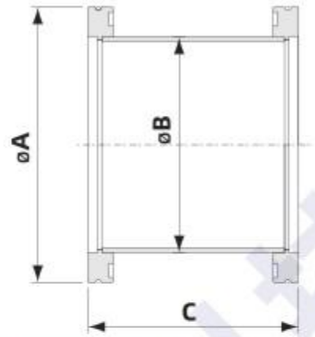

Model No.	Material	A	B	C	Parts No.
ISO63N100	304 S.S.	95	63.5	100	160120720701004
ISO80N100	304 S.S.	110	76.2	100	160120820801004
ISO100N100	304 S.S.	130	101.6	100	160120920901004
ISO160N100	304 S.S.	180	152.4	100	160121221201004
ISO200N100	304 S.S.	240	203.2	100	160121321301004
ISO250N100	304 S.S.	290	254	100	160121421401004
ISO320N200	304 S.S.	370	304.8	200	160121621602004
ISO400N200	304 S.S.	450	406.4	200	160121821802004
ISO500N200	304 S.S.	550	508	200	160121921902004

* Part number plus "K" for sand blasting surface
* Part number plus "L" for polished surface

ISO 90° Elbows

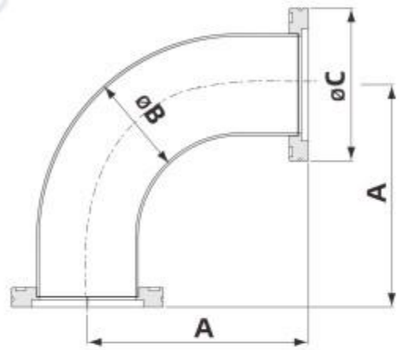

Model No.	Material	A	B	C	Parts No.
ISO63EL90A	304 S.S.	138.4	63.5	95	16032072074
ISO80EL90A	304 S.S.	166.9	76.2	110	16032082084
ISO100EL90A	304 S.S.	217.7	101.6	130	16032092094
ISO160EL90A	304 S.S.	235.2	152.4	180	16032122124

* Part number plus "K" for sand blasting surface
* Part number plus "L" for polished surface

Dimension in mm unless otherwise noted
All information contained herein was current at time of publication, we reserve the right to change the design/specification for products improvement without notice.

兴生机械科技
XingSheng Machinery Technology

02 ISO SERIES

ISO Tees

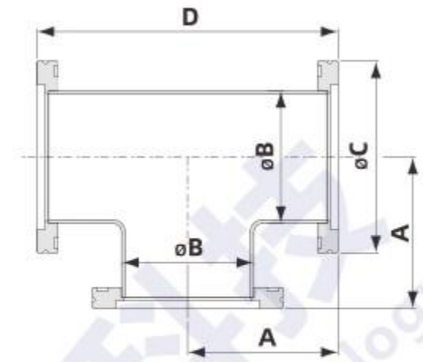

Model No.	Material	A	B	C	D	Parts No.
ISO63TA	304 S.S.	82.8	63.5	95	165.6	16152072074
ISO80TA	304 S.S.	89.15	76.2	110	178.3	16152082084
ISO100TA	304 S.S.	105	101.6	130	210	16152092094
ISO160TA	304 S.S.	133.6	152.4	180	267.2	16152122124

* Part number plus "K" for sand blasting surface
* Part number plus "L" for polished surface

ISO 4-Way Crosses

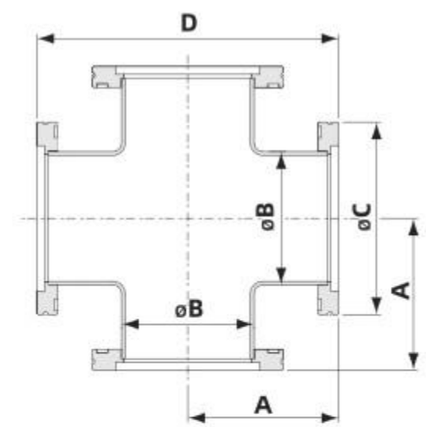

Model No.	Material	A	B	C	D	Parts No.
ISO63XA	304 S.S.	82.8	63.5	95	165.6	16192072074
ISO80XA	304 S.S.	89.15	76.2	110	178.3	16192082084
ISO100XA	304 S.S.	105	101.6	130	210	16192092094
ISO160XA	304 S.S.	133.6	152.4	180	267.2	16192122124

* Part number plus "K" for sand blasting surface
* Part number plus "L" for polished surface

Dimension in mm unless otherwise noted
All information contained herein was current at time of publication, we reserve the right to change the design/specification for products improvement without notice.

ISO Five-Way Crosses

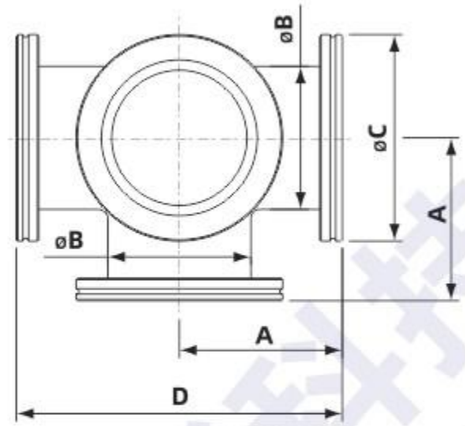

Model No.	Material	A	B	C	D	Parts No.
ISO63FXA	304 S.S.	82.8	63.5	95	165.6	16262072074
ISO80FXA	304 S.S.	89.15	76.2	110	178.3	16262082084
ISO100FXA	304 S.S.	105	101.6	130	210	16262092094
ISO160FXA	304 S.S.	133.6	152.4	180	267.2	16262122124

* Part number plus "K" for sand blasting surface
* Part number plus "L" for polished surface

ISO Six-Way Crosses

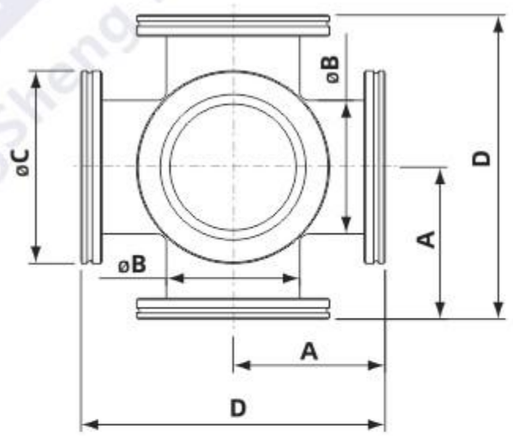

Model No.	Material	A	B	C	D	Parts No.
ISO63SXA	304 S.S.	82.8	63.5	95	165.6	16282072074
ISO80SXA	304 S.S.	89.15	76.2	110	178.3	16282082084
ISO100SXA	304 S.S.	105	101.6	130	210	16282092094
ISO160SXA	304 S.S.	133.6	152.4	180	267.2	16282122124

* Part number plus "K" for sand blasting surface
* Part number plus "L" for polished surface

Dimension in mm unless otherwise noted
All information contained herein was current at time of publication, we reserve the right to change the design/specification for products improvement without notice.

兴生机械科技
XingSheng Machinery Technology

02 ISO SERIES

ISO Centering Ring

Available Area : Europe
C/R' with a notch
Special sizes available upon request

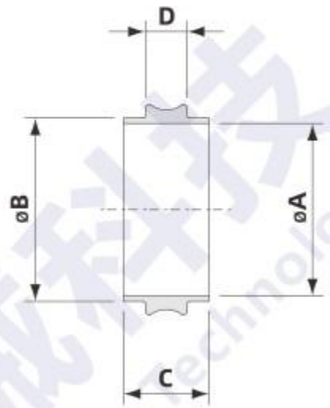

Model No.	Material	A	B	C	D	Parts No.
ISO63CRSE	304 S.S.	68	70	8	3.9	191010420
ISO80CRSE	304 S.S.	81	82.6	8	3.9	191011420
ISO100CRSE	304 S.S.	100	102	8	3.9	191012420
ISO160CRSE	304 S.S.	148	153	8	3.9	191015420
ISO200CRSE	304 S.S.	210	213	8	3.9	191016420
ISO250CRSE	304 S.S.	257.5	261	8	3.9	191017420
ISO320CRSE	304 S.S.	312	318	12	5.6	191019420
ISO400CRSE	304 S.S.	394	400	12	5.6	191021420
ISO500CRSE	304 S.S.	494	501	12	5.6	191023420
ISO630CRSE	304 S.S.	644.5	650.5	12	5.6	191025420
ISO63CRAE	Al	68	70	8	3.9	191010120
ISO80CRAE	Al	81	82.6	8	3.9	191011120
ISO100CRAE	Al	100	102	8	3.9	191012120
ISO160CRAE	Al	148	153	8	3.9	191015120
ISO200CRAE	Al	210	213	8	3.9	191016120
ISO250CRAE	Al	257.5	261	8	3.9	191017120
ISO320CRAE	Al	312	318	12	5.6	191019120
ISO400CRAE	Al	394	400	12	5.6	191021120
ISO500CRAE	Al	494	501	12	5.6	191023120
ISO630CRAE	Al	644.5	650.5	12	5.6	191025120

Dimension in mm unless otherwise noted
All information contained herein was current at time of publication, we reserve the right to change the design/specification for products improvement without notice.

ISO Centering Ring

Available Area : U.S.A.

❶

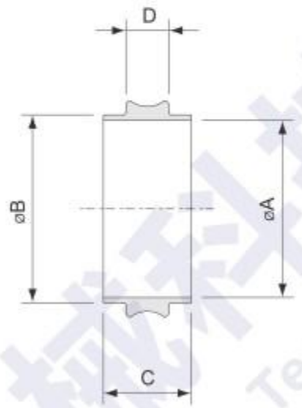

Model No.	Material	A	B	C	D	Parts No.
ISO63CRSA	304 S.S.	67	69.6	8	3.9	191010410
ISO80CRSA	304 S.S.	80	82.6	8	3.9	191011410
ISO100CRSA	304 S.S.	99	101.6	8	3.9	191012410
ISO160CRSA	304 S.S.	150	152.6	8	3.9	191015410
ISO200CRSA	304 S.S.	210	212.6	8	3.9	191016410
ISO250CRSA	304 S.S.	257.5	260.4	8	3.9	191017410
ISO320CRSA	304 S.S.	312	317.3	12	5.6	191019410
ISO400CRSA	304 S.S.	394	399.2	12	5.6	191021410
ISO500CRSA	304 S.S.	494	500.2	12	5.6	191023410
ISO630CRSA	304 S.S.	644.5	650.5	12	5.6	191025410
ISO63CRAA	Al	67	69.6	8	3.9	191010110
ISO80CRAA	Al	80	82.6	8	3.9	191011110
ISO100CRAA	Al	99	101.6	8	3.9	191012110
ISO160CRAA	Al	150	152.6	8	3.9	191015110
ISO200CRAA	Al	210	212.6	8	3.9	191016110
ISO250CRAA	Al	257.5	260.4	8	3.9	191017110
ISO320CRAA	Al	312	317.3	12	5.6	191019110
ISO400CRAA	Al	394	399.2	12	5.6	191021110
ISO500CRAA	Al	494	500.2	12	5.6	191023110
ISO630CRAA	Al	644.5	650.5	12	5.6	191025110

Dimension in mm unless otherwise noted

All information contained herein was current at time of publication, we reserve the right to change the design/specification for products improvement without notice.

兴生机械科技
XingSheng Machinery Technology

02 ISO SERIES

ISO Centering Ring with Viton O'Ring

Available Area : Europe

C/R' with a notch

Special sizes available upon request

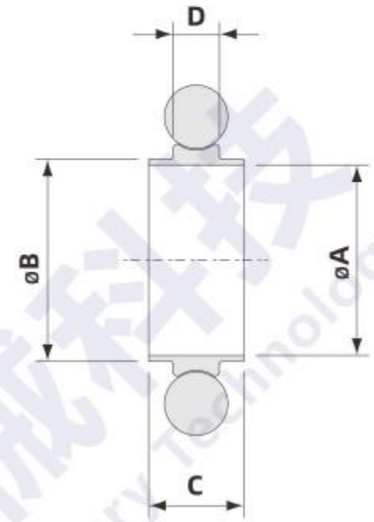

Model No.	Material C/R	Material O'Ring	A	B	C	D	O'Ring Size	Parts No.
ISO63CRVSE	304 S.S.	Viton	68	70	8	3.9	AS-337	191110421
ISO80CRVSE	304 S.S.	Viton	81	82.6	8	3.9	AS-341	191111421
ISO100CRVSE	304 S.S.	Viton	100	102	8	3.9	AS-347	191112421
ISO160CRVSE	304 S.S.	Viton	148	153	8	3.9	AS-362	191115421
ISO200CRVSE	304 S.S.	Viton	210	213	8	3.9	AS-371	191116421
ISO250CRVSE	304 S.S.	Viton	257.5	261	8	3.9	AS-378	191117421
ISO320CRVSE	304 S.S.	Viton	312	318	12	5.6	AS-454	191119421
ISO400CRVSE	304 S.S.	Viton	394	400	12	5.6	AS-461	191121421
ISO500CRVSE	304 S.S.	Viton	494	501	12	5.6	AS-469	191123421
ISO630CRVSE	304 S.S.	Viton	644.5	650.5	12	5.6	AS-475	191125421
ISO63CRVAE	Al	Viton	68	70	8	3.9	AS-337	191110121
ISO80CRVAE	Al	Viton	81	82.6	8	3.9	AS-341	191111121
ISO100CRVAE	Al	Viton	100	102	8	3.9	AS-347	191112121
ISO160CRVAE	Al	Viton	148	153	8	3.9	AS-362	191115121
ISO200CRVAE	Al	Viton	210	213	8	3.9	AS-371	191116121
ISO250CRVAE	Al	Viton	257.5	261	8	3.9	AS-378	191117121
ISO320CRVAE	Al	Viton	312	318	12	5.6	AS-454	191119121
ISO400CRVAE	Al	Viton	394	400	12	5.6	AS-461	191121121
ISO500CRVAE	Al	Viton	494	501	12	5.6	AS-469	191123121
ISO630CRVAE	Al	Viton	644.5	650.5	12	5.6	AS-475	191125121

The color of O'Ring is brown, black is available upon request

Dimension in mm unless otherwise noted

All information contained herein was current at time of publication, we reserve the right to change the design/specification for products improvement without notice.

ISO Centering Ring with NBR O'Ring

Available Area : Europe
C/R' with a notch

❶ *Special sizes available upon request*

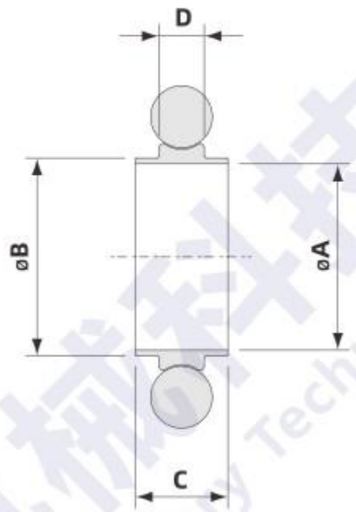

Model No.	Material C/R	Material O'Ring	A	B	C	D	O'Ring Size	Parts No.
ISO63CRNSE	304 S.S.	NBR	68	70	8	3.9	AS-337	191310422
ISO80CRNSE	304 S.S.	NBR	81	82.6	8	3.9	AS-341	191311422
ISO100CRNSE	304 S.S.	NBR	100	102	8	3.9	AS-347	191312422
ISO160CRNSE	304 S.S.	NBR	148	153	8	3.9	AS-362	191315422
ISO200CRNSE	304 S.S.	NBR	210	213	8	3.9	AS-371	191316422
ISO250CRNSE	304 S.S.	NBR	257.5	261	8	3.9	AS-378	191317422
ISO320CRNSE	304 S.S.	NBR	312	318	12	5.6	AS-454	191319422
ISO400CRNSE	304 S.S.	NBR	394	400	12	5.6	AS-461	191321422
ISO500CRNSE	304 S.S.	NBR	494	501	12	5.6	AS-469	191323422
ISO630CRNSE	304 S.S.	NBR	644.5	650.5	12	5.6	AS-475	191325422
ISO63CRNAE	Al	NBR	68	70	8	3.9	AS-337	191310122
ISO80CRNAE	Al	NBR	81	82.6	8	3.9	AS-341	191311122
ISO100CRNAE	Al	NBR	100	102	8	3.9	AS-347	191312122
ISO160CRNAE	Al	NBR	148	153	8	3.9	AS-362	191315122
ISO200CRNAE	Al	NBR	210	213	8	3.9	AS-371	191316122
ISO250CRNAE	Al	NBR	257.5	261	8	3.9	AS-378	191317122
ISO320CRNAE	Al	NBR	312	318	12	5.6	AS-454	191319122
ISO400CRNAE	Al	NBR	394	400	12	5.6	AS-461	191321122
ISO500CRNAE	Al	NBR	494	501	12	5.6	AS-469	191323122
ISO630CRNAE	Al	NBR	644.5	650.5	12	5.6	AS-475	191325122

O'Ring color for NBR material is black, brown is available upon request

Dimension in mm unless otherwise noted

All information contained herein was current at time of publication, we reserve the right to change the design/specification for products improvement without notice.

兴生机械科技
XingSheng Machinery Technology

02 ISO SERIES

ISO Centering Ring with Viton O'Ring

Available Area: U.S.A.

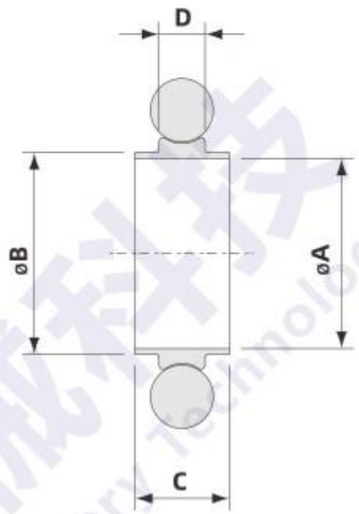

Model No.	Material C/R	Material O'Ring	A	B	C	D	O'Ring Size	Parts No.
ISO63CRVSA	304 S.S.	Viton	67	69.6	8	3.9	AS-337	191110411
ISO80CRVSA	304 S.S.	Viton	80	82.6	8	3.9	AS-341	191111411
ISO100CRVSA	304 S.S.	Viton	99	101.6	8	3.9	AS-347	191112411
ISO160CRVSA	304 S.S.	Viton	150	152.6	8	3.9	AS-362	191115411
ISO200CRVSA	304 S.S.	Viton	210	212.6	8	3.9	AS-371	191116411
ISO250CRVSA	304 S.S.	Viton	257.5	260.4	8	3.9	AS-378	191117411
ISO320CRVSA	304 S.S.	Viton	312	317.3	12	5.6	AS-454	191119411
ISO400CRVSA	304 S.S.	Viton	394	399.2	12	5.6	AS-461	191121411
ISO500CRVSA	304 S.S.	Viton	494	500.2	12	5.6	AS-469	191123411
ISO630CRVSA	304 S.S.	Viton	644.5	650.5	12	5.6	AS-475	191125411
ISO63CRVAA	Al	Viton	67	69.6	8	3.9	AS-337	191110111
ISO80CRVAA	Al	Viton	80	82.6	8	3.9	AS-341	191111111
ISO100CRVAA	Al	Viton	99	101.6	8	3.9	AS-347	191112111
ISO160CRVAA	Al	Viton	150	152.6	8	3.9	AS-362	191115111
ISO200CRVAA	Al	Viton	210	212.6	8	3.9	AS-371	191116111
ISO250CRVAA	Al	Viton	257.5	260.4	8	3.9	AS-378	191117111
ISO320CRVAA	Al	Viton	312	317.3	12	5.6	AS-454	191119111
ISO400CRVAA	Al	Viton	394	399.2	12	5.6	AS-461	191121111
ISO500CRVAA	Al	Viton	494	500.2	12	5.6	AS-469	191123111
ISO630CRVAA	Al	Viton	644.5	650.5	12	5.6	AS-475	191125111

The color of O'Ring is brown, black is available upon request

Dimension in mm unless otherwise noted

All information contained herein was current at time of publication, we reserve the right to change the design/specification for products improvement without notice.

ISO Centering Ring with NBR O'Ring

Available Area: U.S.A.

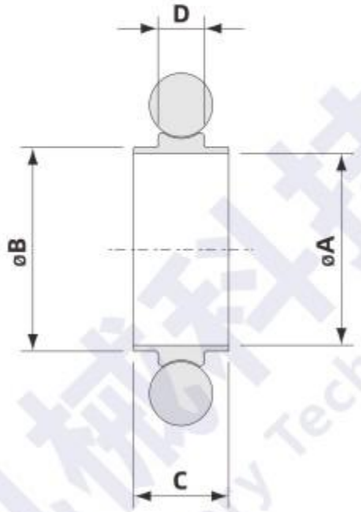

Model No.	Material C/R	Material O'Ring	A	B	C	D	O'Ring Size	Parts No.
ISO63CRNSA	304 S.S.	NBR	67	69.6	8	3.9	AS-337	191310412
ISO80CRNSA	304 S.S.	NBR	80	82.6	8	3.9	AS-341	191311412
ISO100CRNSA	304 S.S.	NBR	99	101.6	8	3.9	AS-347	191312412
ISO160CRNSA	304 S.S.	NBR	150	152.6	8	3.9	AS-362	191315412
ISO200CRNSA	304 S.S.	NBR	210	212.6	8	3.9	AS-371	191316412
ISO250CRNSA	304 S.S.	NBR	257.5	260.4	8	3.9	AS-378	191317412
ISO320CRNSA	304 S.S.	NBR	312	317.3	12	5.6	AS-454	191319412
ISO400CRNSA	304 S.S.	NBR	394	399.2	12	5.6	AS-461	191321412
ISO500CRNSA	304 S.S.	NBR	494	500.2	12	5.6	AS-469	191323412
ISO630CRNSA	304 S.S.	NBR	644.5	650.5	12	5.6	AS-475	191325412
ISO63CRNAA	Al	NBR	67	69.6	8	3.9	AS-337	191310112
ISO80CRNAA	Al	NBR	80	82.6	8	3.9	AS-341	191311112
ISO100CRNAA	Al	NBR	99	101.6	8	3.9	AS-347	191312112
ISO160CRNAA	Al	NBR	150	152.6	8	3.9	AS-362	191315112
ISO200CRNAA	Al	NBR	210	212.6	8	3.9	AS-371	191316112
ISO250CRNAA	Al	NBR	257.5	260.4	8	3.9	AS-378	191317112
ISO320CRNAA	Al	NBR	312	317.3	12	5.6	AS-454	191319112
ISO400CRNAA	Al	NBR	394	399.2	12	5.6	AS-461	191321112
ISO500CRNAA	Al	NBR	494	500.2	12	5.6	AS-469	191323112
ISO630CRNAA	Al	NBR	644.5	650.5	12	5.6	AS-475	191325112

O'Ring color for NBR material is black, brown is available upon request

Dimension in mm unless otherwise noted

All information contained herein was current at time of publication, we reserve the right to change the design/specification for products improvement without notice.

兴生机械科技
XingSheng Machinery Technology

02 ISO SERIES

ISO Outer Ring Centering Ring & Viton O'Ring

Available Area: Europe
C/R' with a notch
Special sizes available upon request

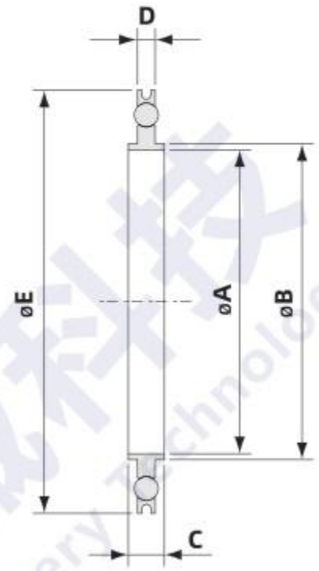

Model No.	Material C/R	Material O'Ring	A	B	C	D	E	Material O/R	O'Ring Size	Parts No.
ISO63OCRVSE	304 S.S.	Viton	68	70	8	3.9	94	Al	AS-337	192110421
ISO80OCRVSE	304 S.S.	Viton	81	82.6	8	3.9	109	Al	AS-341	192111421
ISO100OCRVSE	304 S.S.	Viton	100	102	8	3.9	128	Al	AS-347	192112421
ISO1600CRVSE	304 S.S.	Viton	148	153	8	3.9	179	Al	AS-362	192115421
ISO200OCRVSE	304 S.S.	Viton	210	213	8	3.9	238	Al	AS-371	192116421
ISO250OCRVSE	304 S.S.	Viton	257.5	261	8	3.9	287	Al	AS-378	192117421
ISO320OCRVSE	304 S.S.	Viton	312	318	12	5.6	344	Al	AS-454	192119421
ISO400OCRVSE	304 S.S.	Viton	394	400	12	5.6	446	Al	AS-461	192121421
ISO500OCRVSE	304 S.S.	Viton	494	501	12	5.6	535	Al	AS-469	192123421
ISO630OCRVSE	304 S.S.	Viton	644.5	650.5	12	5.6	684.8	Al	AS-475	192125421
ISO63OCRVAE	Al	Viton	68	70	8	3.9	94	Al	AS-337	192110121
ISO80OCRVAE	Al	Viton	81	82.6	8	3.9	109	Al	AS-341	192111121
ISO100OCRVAE	Al	Viton	100	102	8	3.9	128	Al	AS-347	192112121
ISO160OCRVAE	Al	Viton	148	153	8	3.9	179	Al	AS-362	192115121
ISO200OCRVAE	Al	Viton	210	213	8	3.9	238	Al	AS-371	192116121
ISO250OCRVAE	Al	Viton	257.5	261	8	3.9	287	Al	AS-378	192117121
ISO320OCRVAE	Al	Viton	312	318	12	5.6	344	Al	AS-454	192119121
ISO400OCRVAE	Al	Viton	394	400	12	5.6	446	Al	AS-461	192121121
ISO500OCRVAE	Al	Viton	494	501	12	5.6	535	Al	AS-469	192123121
ISO630OCRVAE	Al	Viton	644.5	650.5	12	5.6	684.8	Al	AS-475	192125121

The color of O'Ring is brown, black is available upon request

Dimension in mm unless otherwise noted

All information contained herein was current at time of publication, we reserve the right to change the design/specification for products improvement without notice.

ISO Outer Ring Centering Ring & NBR O'Ring

Available Area: Europe
C/R' with a notch

1. *Special sizes available upon request*

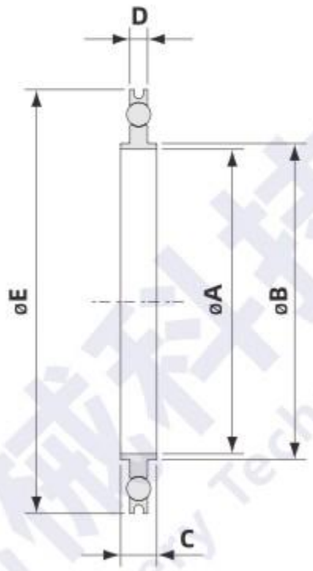

Model No.	Material C/R	Material O'Ring	A	B	C	D	E	Material O/R	O'Ring Size	Parts No.
ISO63OCRNSE	304 S.S.	NBR	68	70	8	3.9	94	Al	AS-337	192310422
ISO80OCRNSE	304 S.S.	NBR	81	82.6	8	3.9	109	Al	AS-341	192311422
ISO100OCRNSE	304 S.S.	NBR	100	102	8	3.9	128	Al	AS-347	192312422
ISO1600CRNSE	304 S.S.	NBR	148	153	8	3.9	179	Al	AS-362	192315422
ISO200OCRNSE	304 S.S.	NBR	210	213	8	3.9	238	Al	AS-371	192316422
ISO250OCRNSE	304 S.S.	NBR	257.5	261	8	3.9	287	Al	AS-378	192317422
ISO320OCRNSE	304 S.S.	NBR	312	318	12	5.6	344	Al	AS-454	192319422
ISO400OCRNSE	304 S.S.	NBR	394	400	12	5.6	446	Al	AS-461	192321422
ISO500OCRNSE	304 S.S.	NBR	494	501	12	5.6	535	Al	AS-469	192323422
ISO630OCRNSE	304 S.S.	NBR	644.5	650.5	12	5.6	684.8	Al	AS-475	192325422
ISO63OCRNAE	Al	NBR	68	70	8	3.9	94	Al	AS-337	192310122
ISO80OCRNAE	Al	NBR	81	82.6	8	3.9	109	Al	AS-341	192311122
ISO100OCRNAE	Al	NBR	100	102	8	3.9	128	Al	AS-347	192312122
ISO160OCRNAE	Al	NBR	148	153	8	3.9	179	Al	AS-362	192315122
ISO200OCRNAE	Al	NBR	210	213	8	3.9	238	Al	AS-371	192316122
ISO250OCRNAE	Al	NBR	257.5	261	8	3.9	287	Al	AS-378	192317122
ISO320OCRNAE	Al	NBR	312	318	12	5.6	344	Al	AS-454	192319122
ISO400OCRNAE	Al	NBR	394	400	12	5.6	446	Al	AS-461	192321122
ISO500OCRNAE	Al	NBR	494	501	12	5.6	535	Al	AS-469	192323122
ISO630OCRNAE	Al	NBR	644.5	650.5	12	5.6	684.8	Al	AS-475	192325122

O'Ring color for NBR material is black, brown is available upon request

Dimension in mm unless otherwise noted

All information contained herein was current at time of publication, we reserve the right to change the design/specification for products improvement without notice.

兴生机械科技
XingSheng Machinery Technology

02 ISO SERIES

ISO Outer Ring Centering Ring & Viton O'Ring

Available Area: U.S.A.

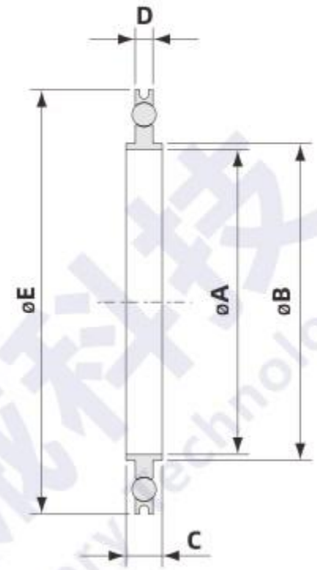

Model No.	Material C/R	Material O'Ring	A	B	C	D	E	Material O/R	O'Ring Size	Parts No.
ISO63OCRVSA	304 S.S.	Viton	67	69.6	8	3.9	94	Al	AS-337	192110411
ISO80OCRVSA	304 S.S.	Viton	80	82.6	8	3.9	109	Al	AS-341	192111411
ISO100OCRVSA	304 S.S.	Viton	99	101.6	8	3.9	128	Al	AS-347	192112411
ISO1600CRVSA	304 S.S.	Viton	150	152.6	8	3.9	179	Al	AS-362	192115411
ISO200OCRVSA	304 S.S.	Viton	210	212.6	8	3.9	238	Al	AS-371	192116411
ISO250OCRVSA	304 S.S.	Viton	257.5	260.4	8	3.9	287	Al	AS-378	192117411
ISO320OCRVSA	304 S.S.	Viton	312	317.3	12	5.6	344	Al	AS-454	192119411
ISO400OCRVSA	304 S.S.	Viton	394	399.2	12	5.6	446	Al	AS-461	192121411
ISO500OCRVSA	304 S.S.	Viton	494	500.2	12	5.6	535	Al	AS-469	192123411
ISO630OCRVSA	304 S.S.	Viton	644.5	650.5	12	5.6	684.8	Al	AS-475	192125411
ISO63OCRVAA	Al	Viton	67	69.6	8	3.9	94	Al	AS-337	192110111
ISO80OCRVAA	Al	Viton	80	82.6	8	3.9	109	Al	AS-341	192111111
ISO100OCRVAA	Al	Viton	99	101.6	8	3.9	128	Al	AS-347	192112111
ISO160OCRVAA	Al	Viton	150	152.6	8	3.9	179	Al	AS-362	192115111
ISO200OCRVAA	Al	Viton	210	212.6	8	3.9	238	Al	AS-371	192116111
ISO250OCRVAA	Al	Viton	257.5	260.4	8	3.9	287	Al	AS-378	192117111
ISO320OCRVAA	Al	Viton	312	317.3	12	5.6	344	Al	AS-454	192119111
ISO400OCRVAA	Al	Viton	394	399.2	12	5.6	446	Al	AS-461	192121111
ISO500OCRVAA	Al	Viton	494	500.2	12	5.6	535	Al	AS-469	192123111
ISO630OCRVAA	Al	Viton	644.5	650.5	12	5.6	684.8	Al	AS-475	192125111

The color of O'Ring is brown, black is available upon request

Dimension in mm unless otherwise noted

All information contained herein was current at time of publication, we reserve the right to change the design/specification for products improvement without notice.

ISO Outer Ring Centering Ring & NBR O'Ring

Available Area: U.S.A.

❶

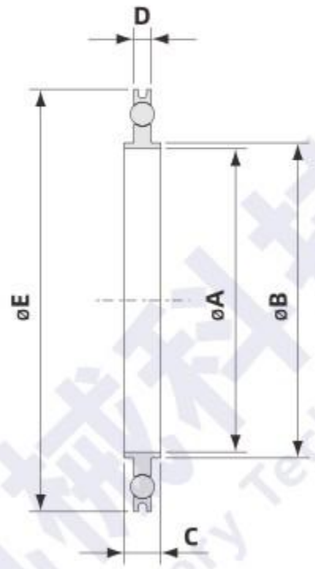

Model No.	Material C/R	Material O'Ring	A	B	C	D	E	Material O/R	O'Ring Size	Parts No.
ISO63OCRNSA	304 S.S.	NBR	67	69.6	8	3.9	94	Al	AS-337	192310412
ISO80OCRNSA	304 S.S.	NBR	80	82.6	8	3.9	109	Al	AS-341	192311412
ISO100OCRNSA	304 S.S.	NBR	99	101.6	8	3.9	128	Al	AS-347	192312412
ISO1600CRNSA	304 S.S.	NBR	150	152.6	8	3.9	179	Al	AS-362	192315412
ISO200OCRNSA	304 S.S.	NBR	210	212.6	8	3.9	238	Al	AS-371	192316412
ISO250OCRNSA	304 S.S.	NBR	257.5	260.4	8	3.9	287	Al	AS-378	192317412
ISO320OCRNSA	304 S.S.	NBR	312	317.3	12	5.6	344	Al	AS-454	192319412
ISO400OCRNSA	304 S.S.	NBR	394	399.2	12	5.6	446	Al	AS-461	192321412
ISO500OCRNSA	304 S.S.	NBR	494	500.2	12	5.6	535	Al	AS-469	192323412
ISO630OCRNSA	304 S.S.	NBR	644.5	650.5	12	5.6	684.8	Al	AS-475	192325412
ISO63OCRNAA	Al	NBR	67	69.6	8	3.9	94	Al	AS-337	192310112
ISO80OCRNAA	Al	NBR	80	82.6	8	3.9	109	Al	AS-341	192311112
ISO100OCRNAA	Al	NBR	99	101.6	8	3.9	128	Al	AS-347	192312112
ISO160OCRNAA	Al	NBR	150	152.6	8	3.9	179	Al	AS-362	192315112
ISO200OCRNAA	Al	NBR	210	212.6	8	3.9	238	Al	AS-371	192316112
ISO250OCRNAA	Al	NBR	257.5	260.4	8	3.9	287	Al	AS-378	192317112
ISO320OCRNAA	Al	NBR	312	317.3	12	5.6	344	Al	AS-454	192319112
ISO400OCRNAA	Al	NBR	394	399.2	12	5.6	446	Al	AS-461	192321112
ISO500OCRNAA	Al	NBR	494	500.2	12	5.6	535	Al	AS-469	192323112
ISO630OCRNAA	Al	NBR	644.5	650.5	12	5.6	684.8	Al	AS-475	192325112

O'Ring color for NBR material is black, brown is available upon request

Dimension in mm unless otherwise noted

All information contained herein was current at time of publication, we reserve the right to change the design/specification for products improvement without notice.

兴生机械科技
XingSheng Machinery Technology

Memo

02 ISO SERIES

Dimension in mm unless otherwise noted

All information contained herein was current at time of publication, we reserve the right to change the design/specification for products improvement without notice.

03 CF SERIES

General Information 3-2
Technical Data 3-4
Applications for CF Components 3-5
Connections of CF-series Fittings 3-5
Blank 3-6
Bored Blank (CF16) 3-10
Bored Blank-Neck (CF16) 3-11
Bored Blank-Neck (CR16) 3-12
Bored Flange 3-13
Reducing F lange 3-17
Half Nipple 3-18
Plate Nut 3-19
Cap 3-19
OFHC Copper Gasket 3-20
OFHC Annealed Gasket 3-21
OFHC+Silver plated Gasket 3-22
Viton Gasket 3-23
CF Flexible Hoses- Rotatable 3-24
CF Compressible Bellows Connections Rotatable 3-25
CF Nipples-Fixed 3-26
CF Nipples-Rotatable 3-26
CF 90° Elbows-Fixed 3-27
CF90° Elbows-Rotatable 3-27
CF Tees-Fixed 3-28
CF Tees- Rotatable 3-28
CF 4 Way Crosses-Fixed 3-29
CF 4 Way Crosses-Rotatable 3-29
CF Five-Way Crosses-Fixed 3-30
CF Five-Way Crosses-Rotatable 3-30
CF Six-Way Crosses-Fixed 3-31
CF Six-Way Crosses- Rotatable 3-31
CF CUBES with Fractional Thread 3-32
CF CUBES with Metric Thread 3-32

General Information

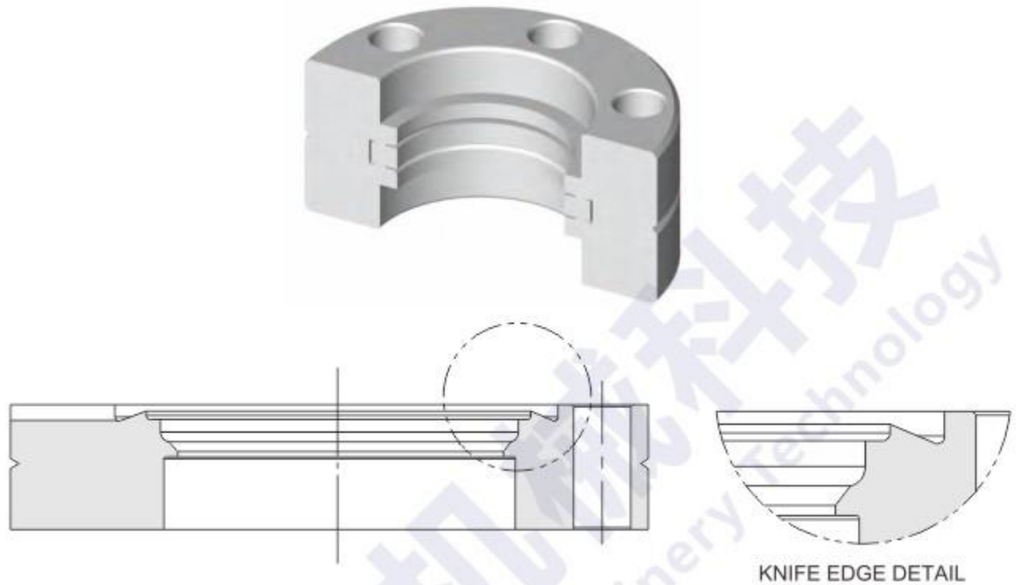

Features

- The high sealing effect and the low leak rates performance of CF flange connections is a result of gasket material. When assembling the CF flange connect, the knife edge is pressed into the flat copper gasket and force the seal material both axially as well as radially outwards to the flange. The material is enclosed and cannot flow even at high bakeout temperature. Due to this deformation of the seal such connections may sometimes stick together. They can be easily separated with a special tool or screwdriver.

- Offered in both rotatable and nonrotatable versions with through holes and tapped bolt holes. Metric tapped holes and untapped holes flanges are identical products. UNC or UNF or other tapped holes can be ordered as specials.

All information contained herein was current at time of publication, we reserve the right to change the design/specification for products improvement without notice.

General Information

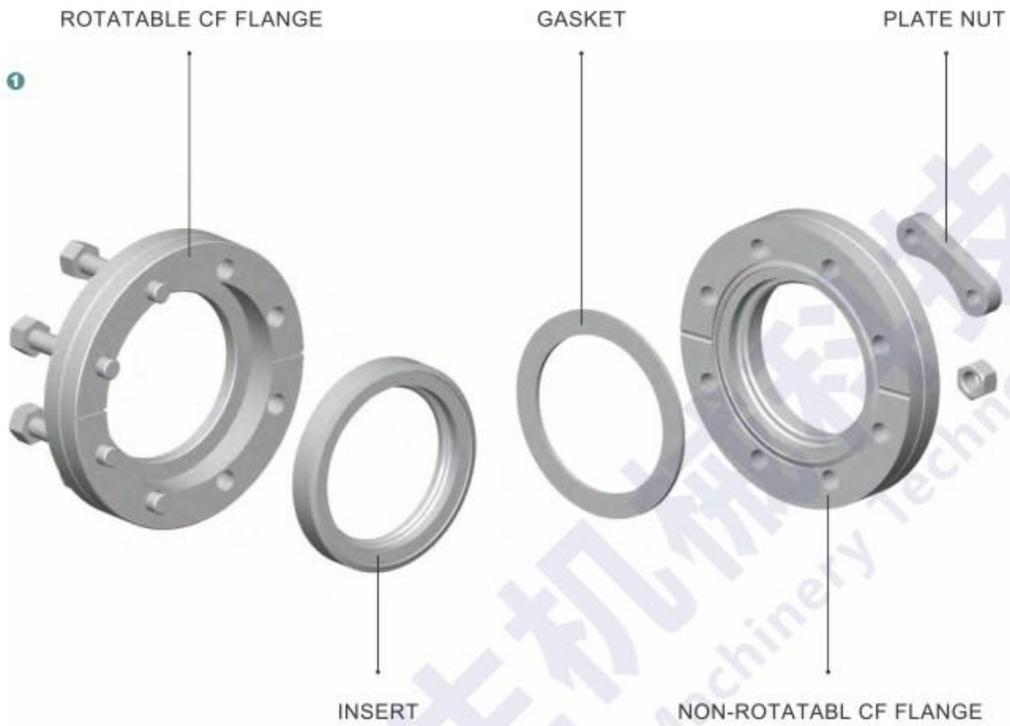

Specifications

- Blanks & Flanges : 304 S.S. (Other material available upon request)
- Gaskets : OFHC Copper or Viton
- Bolt : 304 S.S.
- Temp. Range : -200ºC ~ 450ºC (OFHC Copper)
- Vacuum Range : $1*10^{-13}$ mbar
- Torque Rating : CF35 and smaller 220 kgf-cm
  CF63 and larger 360 kgf-cm
- Larger or special size available upon request

Technical Data

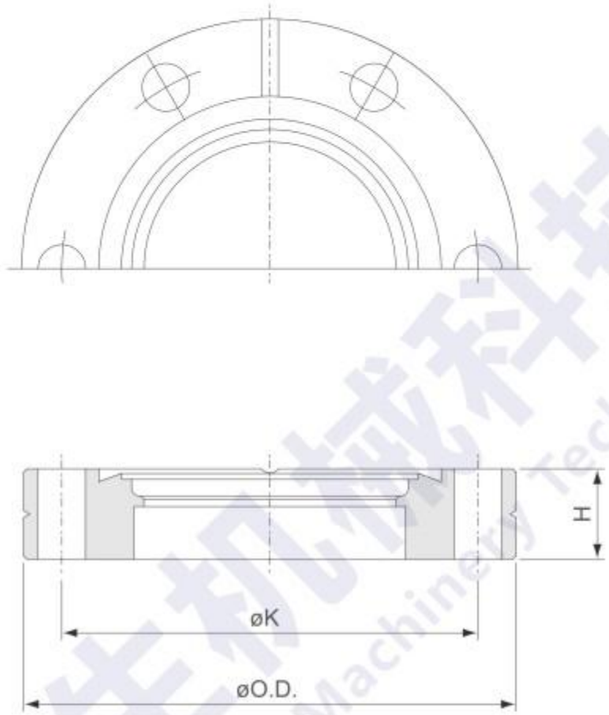

DN	CF	16	35	63	100	150	200	250	275	300-14"	300	350
Inch spec.	Inch	1-1/3"	2-3/4"	4-1/2"	6"	8"	10"	12"	13-1/4"	14"	14-1/2"	16-1/2"
Outside diameter O.D.	mm	33.8	69.5	113.6	151.6	202.5	253.2	304	336.6	355.6	368.3	419.1
Bolt circle diameter K	mm	26.9	58.7	92.1	130.3	181	231.8	284	306.3	325.5	338.1	388.9
Height H	mm	7.5	12.7	18	20	22	24.7	28.5	28.5	28.5	28.5	28.5
Number of holes	mm	6	6	8	16	20	24	32	30	30	32	36
Hole diameter	mm	4.4	6.7	8.4	8.4	8.4	8.4	8.4	10.3	10.3	10.3	10.3

Dimension in mm unless otherwise noted
All information contained herein was current at time of publication, we reserve the right to change the design/specification for products improvement without notice.

兴生机械科技
XingSheng Machinery Technology

03 CF SERIES

Dimension in mm unless otherwise noted
All information contained herein was current at time of publication, we reserve the right to change the design/specification for products improvement without notice.

Applications for CF Components

Assembly

- The CF flange connection consists of two identical flanges with a flat gasket made of OFHC copper, bolts, nuts. Because the applications are UHV environments, so the preparation work is very important before installation. Surface cleaning guarantees the lowest possible outgassing and leak rates.

- Using clean lint free gloves, place pre-cleaned OFHC copper gasket against knife edge seal, preferably the flange most likely to hold and support gasket from falling. With gasket in place fit mating flange with desired bolt orientation; if flanges are fitted with leak test grooves, they should aligned.

- With flanges aligned, insert proper size bolt and hand tighten. Repeat this procedure with remaining bolts. After hand tightening all bolts, support bolt and tighten nut using two closed-end box wrenches. (washer are used on nut side)

CF flanges are suited for use in applications requiring a very clean environment, ultrahigh vacuum conditions, high temperature or where critical or dangerous materials must be contained or excluded. This include:

1. Difficult applications with corrosive radioactive, toxic or air sensitive materials.
2. Materials creation and processing such as molecular beam epitaxy.
3. Analytical instrumentation including Auger electron spectrometers and electron microscopes.
4. High energy physics installations such as accelerators and fusion devices

Connections of CF-series Fittings

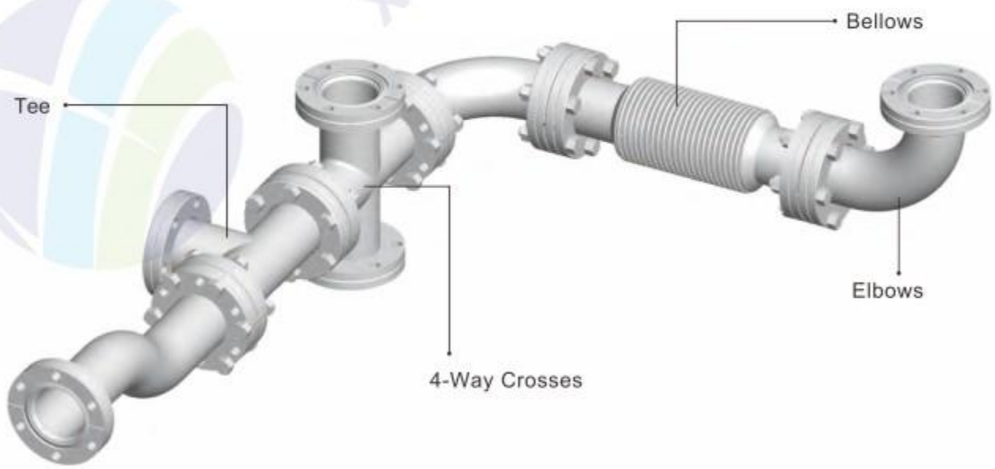

Blank

Nonrotatable

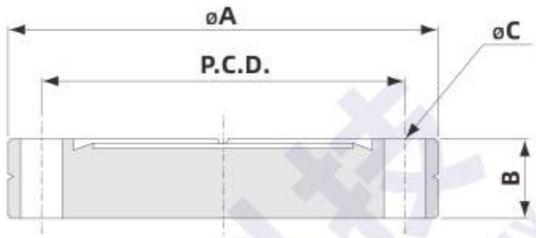

Model No.	Material	A	B	C*No.	P.C.D.	Parts No.
CF16B	304 S.S.	33.8	7.5	4.4*6	26.9	154102003
CF35B	304 S.S.	69.5	12.7	6.7*6	58.7	154104003
CF63B	304 S.S.	113.6	18	8.4*8	92.1	154107003
CF100B	304 S.S.	151.6	20	8.4*16	130.3	154109003
CF150B	304 S.S.	202.5	22	8.4*20	181	154111003
CF200B	304 S.S.	253.2	24.7	8.4*24	231.8	154113003
CF250B	304 S.S.	304	28.5	8.4*32	284	1541X1003
CF275B	304 S.S.	336.5	28.5	10.3*30	306.3	154114003
CF300B-14"	304 S.S.	355.6	28.5	10.3*30	325.5	154115003
CF300B	304 S.S.	368.3	28.5	10.3*32	338.1	1541X2003
CF350B	304 S.S.	419.1	28.5	10.3*36	388.9	154117003
CF16B-316	316 S.S.	33.8	7.5	4.4*6	26.9	154102005
CF35B-316	316 S.S.	69.5	12.7	6.7*6	58.7	154104005
CF63B-316	316 S.S.	113.6	18	8.4*8	92.1	154107005
CF100B-316	316 S.S.	151.6	20	8.4*16	130.3	154109005
CF150B-316	316 S.S.	202.5	22	8.4*20	181	154111005
CF200B-316	316 S.S.	253.2	24.7	8.4*24	231.8	154113005
CF250B-316	316 S.S.	304	28.5	8.4*32	284	1541X1005
CF275B-316	316 S.S.	336.5	28.5	10.3*30	306.3	154114005
CF300B-14"-316	316 S.S.	355.6	28.5	10.3*30	325.5	154115005
CF300B-316	316 S.S.	368.3	28.5	10.3*32	338.1	1541X2005
CF350B-316	316 S.S.	419.1	28.5	10.3*36	388.9	154117005

Note:Inch spec. refer to page 3-4

All information contained herein was current at time of publication, we reserve the right to change the design/specification for products improvement without notice.

All information contained herein was current at time of publication, we reserve the right to change the design/specification for products improvement without notice.

Blank

Nonrotatable-Tapped Bolt Holes

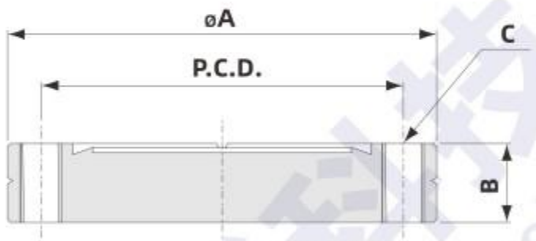

Model No.	Material	A	B	C*No.	P.C.D.	Parts No.
CF16BTAP	304 S.S.	33.8	7.5	M4*6	26.9	154202003
CF35BTAP	304 S.S.	69.5	12.7	M6*6	58.7	154204003
CF63BTAP	304 S.S.	113.6	18	M8*8	92.1	154207003
CF100BTAP	304 S.S.	151.6	20	M8*16	130.3	154209003
CF150BTAP	304 S.S.	202.5	22	M8*20	181	154211003
CF200BTAP	304 S.S.	253.2	24.7	M8*24	231.8	154213003
CF250BTAP	304 S.S.	304	28.5	M8*32	284	1542X1003
CF275BTAP	304 S.S.	336.5	28.5	M10*30	306.3	154214003
CF300BTAP-14"	304 S.S.	355.6	28.5	M10*30	325.5	154215003
CF300BTAP	304 S.S.	368.3	28.5	M10*32	338.1	1542X2003
CF350BTAP	304 S.S.	419.1	28.5	M10*36	388.9	154217003
CF16BTAP-316	316 S.S.	33.8	7.5	M4*6	26.9	154202005
CF35BTAP-316	316 S.S.	69.5	12.7	M6*6	58.7	154204005
CF63BTAP-316	316 S.S.	113.6	18	M8*8	92.1	154207005
CF100BTAP-316	316 S.S.	151.6	20	M8*16	130.3	154209005
CF150BTAP-316	316 S.S.	202.5	22	M8*20	181	154211005
CF200BTAP-316	316 S.S.	253.2	24.7	M8*24	231.8	154213005
CF250BTAP-316	316 S.S.	304	28.5	M8*32	284	1542X1005
CF275BTAP-316	316 S.S.	336.5	28.5	M10*30	306.3	154214005
CF300BTAP-14"-316	316 S.S.	355.6	28.5	M10*30	325.5	154215005
CF300BTAP-316	316 S.S.	368.3	28.5	M10*32	338.1	1542X2005
CF350BTAP-316	316 S.S.	419.1	28.5	M10*36	388.9	154217005

Note:Inch spec. refer to page 3-4

Dimension in mm unless otherwise noted

All information contained herein was current at time of publication, we reserve the right to change the design/specification for products improvement without notice.

兴生机械科技
XingSheng Machinery Technology

03 CF SERIES

Blank

Rotatable

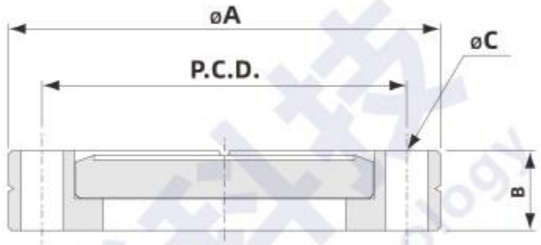

Model No.	Material	A	B	C*No.	P.C.D.	Parts No.
CR16B	304 S.S.	33.8	7.5	4.4*6	26.9	154302003
CR35B	304 S.S.	69.5	12.7	6.7*6	58.7	154304003
CR63B	304 S.S.	113.6	19	8.4*8	92.1	154307003
CR100B	304 S.S.	151.6	21.5	8.4*16	130.3	154309003
CR150B	304 S.S.	202.5	24	8.4*20	181	154311003
CR200B	304 S.S.	253.2	24.7	8.4*24	231.8	154313003
CR250B	304 S.S.	304	28.5	8.4*32	284	1543X1003
CR275B	304 S.S.	336.5	28.5	10.3*30	306.3	154314003
CR300B-14"	304 S.S.	355.6	28.5	10.3*30	325.5	154315003
CR300B	304 S.S.	368.3	28.5	10.3*32	338.1	1543X2003
CR350B	304 S.S.	419.1	28.5	10.3*36	388.9	154317003
CR16B-316	316 S.S.	33.8	7.5	4.4*6	26.9	154302005
CR35B-316	316 S.S.	69.5	12.7	6.7*6	58.7	154304005
CR63B-316	316 S.S.	113.6	19	8.4*8	92.1	154307005
CR100B-316	316 S.S.	151.6	21.5	8.4*16	130.3	154309005
CR150B-316	316 S.S.	202.5	24	8.4*20	181	154311005
CR200B-316	316 S.S.	253.2	24.7	8.4*24	231.8	154313005
CR250B-316	316 S.S.	304	28.5	8.4*32	284	1543X1005
CR275B-316	316 S.S.	336.5	28.5	10.3*30	306.3	154314005
CR300B-14"-316	316 S.S.	355.6	28.5	10.3*30	325.5	154315005
CR300B-316	316 S.S.	368.3	28.5	10.3*32	338.1	1543X2005
CR350B-316	316 S.S.	419.1	28.5	10.3*36	388.9	154317005

Note:Inch spec. refer to page 3-4

Dimension in mm unless otherwise noted

All information contained herein was current at time of publication, we reserve the right to change the design/specification for products improvement without notice.

Blank

Rotatable-Tapped Bolt Holes

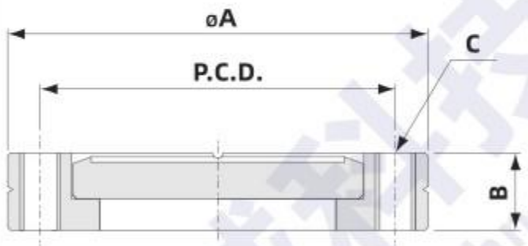

Model No.	Material	A	B	C*No.	P.C.D.	Parts No.
CR16BTAP	304 S.S.	33.8	7.5	M4*6	26.9	154402003
CR35BTAP	304 S.S.	69.5	12.7	M6*6	58.7	154404003
CR63BTAP	304 S.S.	113.6	19	M8*8	92.1	154407003
CR100BTAP	304 S.S.	151.6	21.5	M8*16	130.3	154409003
CR150BTAP	304 S.S.	202.5	24	M8*20	181	154411003
CR200BTAP	304 S.S.	253.2	24.7	M8*24	231.8	154413003
CR250BTAP	304 S.S.	304	28.5	M8*32	284	1544X1003
CR275BTAP	304 S.S.	336.5	28.5	M10*30	306.3	154414003
CR300BTAP-14"	304 S.S.	355.6	28.5	M10*30	325.5	154415003
CR300BTAP	304 S.S.	368.3	28.5	M10*32	338.1	1544X2003
CR350BTAP	304 S.S.	419.1	28.5	M10*36	388.9	154417003
CR16BTAP-316	316 S.S.	33.8	7.5	M4*6	26.9	154402005
CR35BTAP-316	316 S.S.	69.5	12.7	M6*6	58.7	154404005
CR63BTAP-316	316 S.S.	113.6	19	M8*8	92.1	154407005
CR100BTAP-316	316 S.S.	151.6	21.5	M8*16	130.3	154409005
CR150BTAP-316	316 S.S.	202.5	24	M8*20	181	154411005
CR200BTAP-316	316 S.S.	253.2	24.7	M8*24	231.8	154413005
CR250BTAP-316	316 S.S.	304	28.5	M8*32	284	1544X1005
CR275BTAP-316	316 S.S.	336.5	28.5	M10*30	306.3	154414005
CR300BTAP-14"-316	316 S.S.	355.6	28.5	M10*30	325.5	154415005
CR300BTAP-316	316 S.S.	368.3	28.5	M10*32	338.1	1544X2005
CR350BTAP-316	316 S.S.	419.1	28.5	M10*36	388.9	154417005

Note:Inch spec. refer to page 3-4

Dimension in mm unless otherwise noted

All information contained herein was current at time of publication, we reserve the right to change the design/specification for products improvement without notice.

兴生机械科技
XingSheng Machinery Technology

03 CF SERIES

Bored Blank (CF16)

Nonrotatable

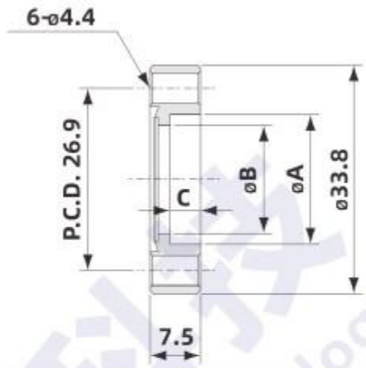

Model No.	Material	Inch spec.	A	B	C	Parts No.
CF16B7	304 S.S.	1-1/3"	6.5	5.5	5.3	154502043
CF16B12	304 S.S.	1-1/3"	12.9	10.4	4.5	154502073
CF16B19	304 S.S.	1-1/3"	19.15	16	4.5	154502093
CF16B7-316	316 S.S.	1-1/3"	6.5	5.5	5.3	154502045
CF16B12-316	316 S.S.	1-1/3"	12.9	10.4	4.5	154502075
CF16B19-316	316 S.S.	1-1/3"	19.15	16	4.5	154502095

Bored Blank (CF16)

Nonrotatable-Tapped Bolt Holes

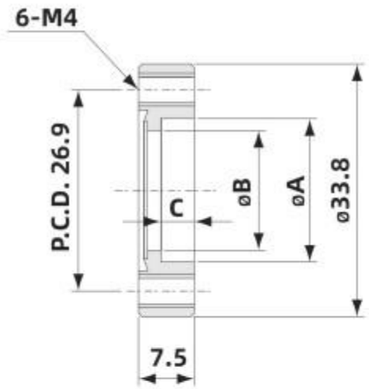

Model No.	Material	Inch spec.	A	B	C	Parts No.
CF16B7TAP	304 S.S.	1-1/3"	6.5	5.5	5.3	154602043
CF16B12TAP	304 S.S.	1-1/3"	12.9	10.4	4.5	154602073
CF16B19TAP	304 S.S.	1-1/3"	19.15	16	4.5	154602093
CF16B7TAP-316	316 S.S.	1-1/3"	6.5	5.5	5.3	154602045
CF16B12TAP-316	316 S.S.	1-1/3"	12.9	10.4	4.5	154602075
CF16B19TAP-316	316 S.S.	1-1/3"	19.15	16	4.5	154602095

Dimension in mm unless otherwise noted

All information contained herein was current at time of publication, we reserve the right to change the design/specification for products improvement without notice.

Bored Blank-Neck(CF16)

Nonrotatable

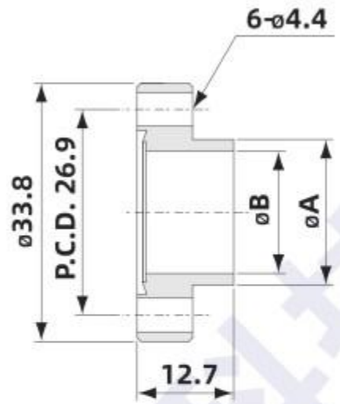

Model No.	Material	Inch spec.	A	B	Parts No.
CF16B7N	304 S.S.	1-1/3"	6.35	4.5	154902043
CF16B12N	304 S.S.	1-1/3"	12.7	9.5	154902073
CF16B19N	304 S.S.	1-1/3"	19.05	16	154902093
CF16B7N-316	316 S.S.	1-1/3"	6.35	4.5	154902045
CF16B12N-316	316 S.S.	1-1/3"	12.7	9.5	154902075
CF16B19N-316	316 S.S.	1-1/3"	19.05	16	154902095

Bored Blank-Neck(CF16)

Nonrotatable-Tapped Bolt Holes

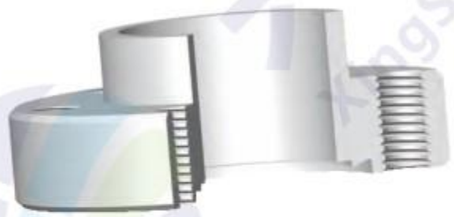

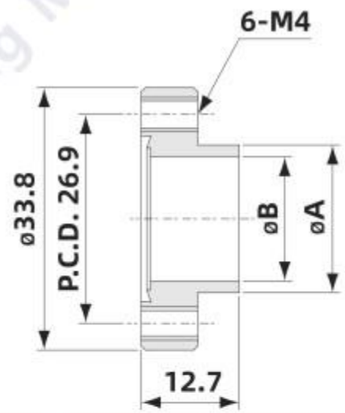

Model No.	Material	Inch spec.	A	B	Parts No.
CF16B7TAPN	304 S.S.	1-1/3"	6.35	4.5	155002043
CF16B12TAPN	304 S.S.	1-1/3"	12.7	9.5	155002073
CF16B19TAPN	304 S.S.	1-1/3"	19.05	16	155002093
CF16B7TAPN-316	316 S.S.	1-1/3"	6.35	4.5	155002045
CF16B12TAPN-316	316 S.S.	1-1/3"	12.7	9.5	155002075
CF16B19TAPN-316	316 S.S.	1-1/3"	19.05	16	155002095

Dimension in mm unless otherwise noted

All information contained herein was current at time of publication, we reserve the right to change the design/specification for products improvement without notice.

兴生机械科技
XingSheng Machinery Technology

03 CF SERIES

Bored Blank-Neck (CR16)

Rotatable

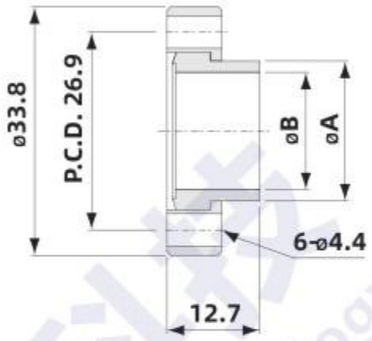

Model No.	Material	Inch spec.	A	B	Parts No.
CR16B7N	304 S.S.	1-1/3"	6.35	4.5	155102043
CR16B12N	304 S.S.	1-1/3"	12.7	9.5	155102073
CR16B19N	304 S.S.	1-1/3"	19.05	16	155102093
CR16B7N-316	316 S.S.	1-1/3"	6.35	4.5	155102045
CR16B12N-316	316 S.S.	1-1/3"	12.7	9.5	155102075
CR16B19N-316	316 S.S.	1-1/3"	19.05	16	155102095

Bored Blank-Neck (CR16)

Rotatable-Tapped Bolt Holes

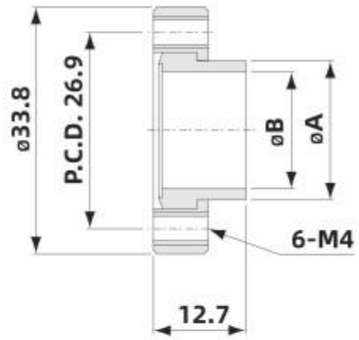

Model No.	Material	Inch spec.	A	B	Parts No.
CR16B7TAPN	304 S.S.	1-1/3"	6.35	4.5	155202043
CR16B12TAPN	304 S.S.	1-1/3"	12.7	9.5	155202073
CR16B19TAPN	304 S.S.	1-1/3"	19.05	16	155202093
CR16B7TAPN-316	316 S.S.	1-1/3"	6.35	4.5	155202045
CR16B12TAPN-316	316 S.S.	1-1/3"	12.7	9.5	155202075
CR16B19TAPN-316	316 S.S.	1-1/3"	19.05	16	155202095

Dimension in mm unless otherwise noted

All information contained herein was current at time of publication, we reserve the right to change the design/specification for products improvement without notice.

Bored Flange

Nonrotatable

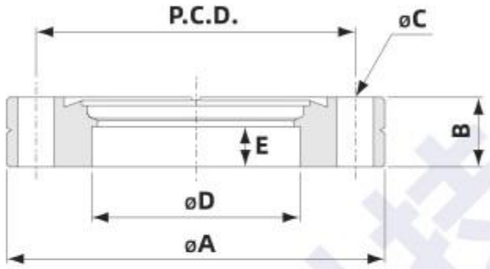

Model No.	Material	A	B	C*No.	D	E	P.C.D.	Parts No.
CF35B25	304 S.S.	69.5	12.7	6.7*6	25.6	7.4	58.7	154504113
CF35B38	304 S.S.	69.5	12.7	6.7*6	38.3	7.4	58.7	154504133
CF35B42	304 S.S.	69.5	12.7	6.7*6	42.9	7.4	58.7	154504AG3
CF63B51	304 S.S.	113.6	18	8.4*8	51.1	8.5	92.1	154507143
CF63B63	304 S.S.	113.6	18	8.4*8	63.7	8.5	92.1	154507153
CF100B102	304 S.S.	151.6	20	8.4*16	102.2	8.9	130.3	154509183
CF150B153	304 S.S.	202.5	22	8.4*20	153.1	9.3	181	154511203
CF200B204	304 S.S.	253.2	24.7	8.4*24	203.7	12	231.8	154513213
CF250B255	304 S.S.	304	28.5	8.4*32	255	15.8	284	1545X1223
CF275B255	304 S.S.	336.5	28.5	10.3*30	255	15.8	306.3	154514223
CF300B305-14"	304 S.S.	355.6	28.5	10.3*30	305.3	15.8	325.5	154515233
CF300B305	304 S.S.	368.3	28.5	10.3*32	305.3	15.8	338.1	1545X2233
CR350B356	304 S.S.	419.1	28.5	10.3*36	356.1	15.8	388.9	154517243
CF35B25-316	316 S.S.	69.5	12.7	6.7*6	25.6	7.4	58.7	154504115
CF35B38-316	316 S.S.	69.5	12.7	6.7*6	38.3	7.4	58.7	154504135
CF35B42-316	316 S.S.	69.5	12.7	6.7*6	42.9	7.4	58.7	154504AG5
CF63B51-316	316 S.S.	113.6	18	8.4*8	51.1	8.5	92.1	154507145
CF63B63-316	316 S.S.	113.6	18	8.4*8	63.7	8.5	92.1	154507155
CF100B102-316	316 S.S.	151.6	20	8.4*16	102.2	8.9	130.3	154509185
CF150B153-316	316 S.S.	202.5	22	8.4*20	153.1	9.3	181	154511205
CF200B204-316	316 S.S.	253.2	24.7	8.4*24	203.7	12	231.8	154513215
CF250B255-316	316 S.S.	304	28.5	8.4*32	255	15.8	284	1545X1225
CF275B255-316	316 S.S.	336.5	28.5	10.3*30	255	15.8	306.3	154514225
CF300B305-14"-316	316 S.S.	355.6	28.5	10.3*30	305.3	15.8	325.5	154515235
CF300B305-316	316 S.S.	368.3	28.5	10.3*32	305.3	15.8	338.1	1545X2235
CF350B356-316	316 S.S.	419.1	28.5	10.3*36	356.1	15.8	388.9	154517245

Note:Inch spec. refer to page 3-4

Dimension in mm unless otherwise noted

All information contained herein was current at time of publication, we reserve the right to change the design/specification for products improvement without notice.

兴生机械科技
XingSheng Machinery Technology

03 CF SERIES

Bored Flange

Nonrotatable-Tapped Bolt Holes

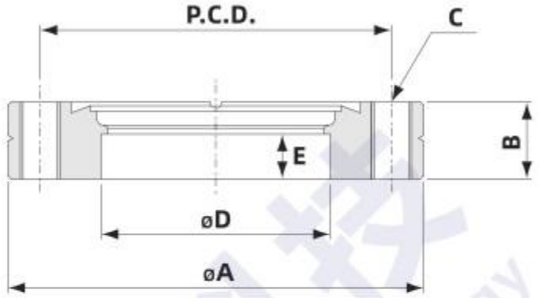

Model No.	Material	A	B	C*No.	D	E	P.C.D.	Parts No.
CF35B25TAP	304 S.S.	69.5	12.7	M6*6	25.6	7.4	58.7	154604113
CF35B38TAP	304 S.S.	69.5	12.7	M6*6	38.3	7.4	58.7	154604133
CF35B42TAP	304 S.S.	69.5	12.7	M6*6	42.9	7.4	58.7	154604AG3
CF63B51TAP	304 S.S.	113.6	18	M8*8	51.1	8.5	92.1	154607143
CF63B63TAP	304 S.S.	113.6	18	M8*8	63.7	8.5	92.1	154607153
CF100B102TAP	304 S.S.	151.6	20	M8*16	102.2	8.9	130.3	154609183
CF150B153TAP	304 S.S.	202.5	22	M8*20	153.1	9.3	181	154611203
CF200B204TAP	304 S.S.	253.2	24.7	M8*24	203.7	12	231.8	154613213
CF250B255TAP	304 S.S.	304	28.5	M8*32	255	15.8	284	1546X1223
CF275B255TAP	304 S.S.	336.5	28.5	M10*30	255	15.8	306.3	154614223
CF300B305TAP-14"	304 S.S.	355.6	28.5	M10*30	305.3	15.8	325.5	154615233
CF300B305TAP	304 S.S.	368.3	28.5	M10*32	305.3	15.8	338.1	1546X2233
CF350B356TAP	304 S.S.	419.1	28.5	M10*36	356.1	15.8	388.9	154617243
CF35B25TAP-316	316 S.S.	69.5	12.7	M6*6	25.6	7.4	58.7	154604115
CF35B38TAP-316	316 S.S.	69.5	12.7	M6*6	38.3	7.4	58.7	154604135
CF35B42TAP-316	316 S.S.	69.5	12.7	M6*6	42.9	7.4	58.7	154604AG5
CF63B51TAP-316	316 S.S.	113.6	18	M8*8	51.1	8.5	92.1	154607145
CF63B63TAP-316	316 S.S.	113.6	18	M8*8	63.7	8.5	92.1	154607155
CF100B102TAP-316	316 S.S.	151.6	20	M8*16	102.2	8.9	130.3	154609185
CF150B153TAP-316	316 S.S.	202.5	22	M8*20	153.1	9.3	181	154611205
CF200B204TAP-316	316 S.S.	253.2	24.7	M8*24	203.7	12	231.8	154613215
CF250B255TAP-316	316 S.S.	304	28.5	M8*32	255	15.8	284	1546X1225
CF275B255TAP-316	316 S.S.	336.5	28.5	M10*30	255	15.8	306.3	154614225
CF300B305TAP-14"-316	316 S.S.	355.6	28.5	M10*30	305.3	15.8	325.5	154615235
CF300B305TAP-316	316 S.S.	368.3	28.5	M10*32	305.3	15.8	338.1	1546X2235
CF350B356TAP-316	316 S.S.	419.1	28.5	M10*36	356.1	15.8	388.9	154617245

Note:Inch spec. refer to page 3-4

Dimension in mm unless otherwise noted

All information contained herein was current at time of publication, we reserve the right to change the design/specification for products improvement without notice.

Bored Flange

Rotatable

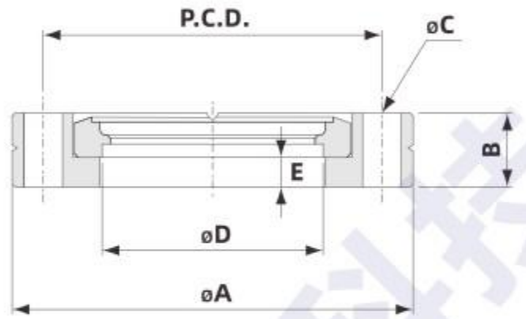

Model No.	Material	A	B	C*No.	D	E	P.C.D.	Parts No.
CR35B25	304 S.S.	69.5	12.7	6.7*6	25.6	5.1	58.7	154704113
CR35B38	304 S.S.	69.5	12.7	6.7*6	38.3	5.1	58.7	154704133
CR35B42	304 S.S.	69.5	12.7	6.7*6	42.9	5.1	58.7	154704AG3
CR63B51	304 S.S.	113.6	19	8.4*8	51.1	6.3	92.1	154707143
CR63B63	304 S.S.	113.6	19	8.4*8	63.7	6.3	92.1	154707153
CR100B102	304 S.S.	151.6	21.5	8.4*16	102.2	7.2	130.3	154709183
CR150B153	304 S.S.	202.5	24	8.4*20	153.1	8.2	181	154711203
CR200B204	304 S.S.	253.2	24.7	8.4*24	203.7	7.5	231.8	154713213
CR250B255	304 S.S.	304	28.5	8.4*32	255	8.8	284	1547X1223
CR275B255	304 S.S.	336.5	28.5	10.3*30	255	8.8	306.3	154714223
CR300B305-14"	304 S.S.	355.6	28.5	10.3*30	305.3	8.8	325.5	154715233
CR300B305	304 S.S.	368.3	28.5	10.3*32	305.3	8.8	338.1	1547X2233
CR350B356	304 S.S.	419.1	28.5	10.3*36	356.1	8.8	388.9	154717243
CF35B25-316	316 S.S.	69.5	12.7	6.7*6	25.6	5.1	58.7	154704115
CR35B38-316	316 S.S.	69.5	12.7	6.7*6	38.3	5.1	58.7	154704135
CR35B42-316	316 S.S.	69.5	12.7	6.7*6	42.9	5.1	58.7	154704AG5
CR63B51-316	316 S.S.	113.6	19	8.4*8	51.1	6.3	92.1	154707145
CR63B63-316	316 S.S.	113.6	19	8.4*8	63.7	6.3	92.1	154707155
CR100B102-316	316 S.S.	151.6	21.5	8.4*16	102.2	7.2	130.3	154709185
CR150B153-316	316 S.S.	202.5	24	8.4*20	153.1	8.2	181	154711205
CR200B204-316	316 S.S.	253.2	24.7	8.4*24	203.7	7.5	231.8	154713215
CR250B255-316	316 S.S.	304	28.5	8.4*32	255	8.8	284	1547X1225
CR275B255-316	316 S.S.	336.5	28.5	10.3*30	255	8.8	306.3	154714225
CR300B305-14"-316	316 S.S.	355.6	28.5	10.3*30	305.3	8.8	325.5	154715235
CR300B305-316	316 S.S.	368.3	28.5	10.3*32	305.3	8.8	338.1	1547X2235
CR350B356-316	316 S.S.	419.1	28.5	10.3*36	356.1	8.8	388.9	154717245

Note:Inch spec. refer to page 3-4

Dimension in mm unless otherwise noted

All information contained herein was current at time of publication, we reserve the right to change the design/specification for products improvement without notice.

兴生机械科技
XingSheng Machinery Technology

03 CF SERIES

Bored Flange

Rotatable-Tapped Bolt Holes

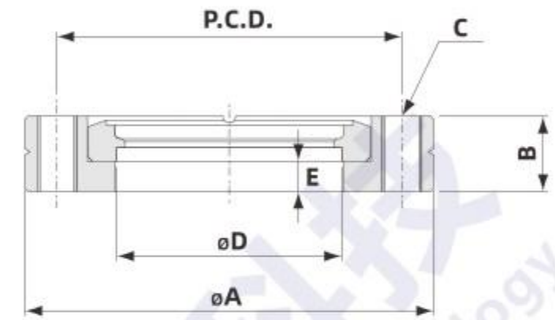

Model No.	Material	A	B	C*No.	D	E	P.C.D.	Parts No.
CR35B25TAP	304 S.S.	69.5	12.7	M6*6	25.6	5.1	58.7	154804113
CR35B38TAP	304 S.S.	69.5	12.7	M6*6	38.3	5.1	58.7	154804133
CR35B42TAP	304 S.S.	69.5	12.7	M6*6	42.9	5.1	58.7	154804AG3
CR63B51TAP	304 S.S.	113.6	19	M8*8	51.1	6.3	92.1	154807143
CR63B63TAP	304 S.S.	113.6	19	M8*8	63.7	6.3	92.1	154807153
CR100B102TAP	304 S.S.	151.6	21.5	M8*16	102.2	7.2	130.3	154809183
CR150B153TAP	304 S.S.	202.5	24	M8*20	153.1	8.2	181	154811203
CR200B204TAP	304 S.S.	253.2	24.7	M8*24	203.7	7.5	231.8	154813213
CR250B255TAP	304 S.S.	304	28.5	M8*32	255	8.8	284	1548X1223
CR275B255TAP	304 S.S.	336.5	28.5	M10*30	255	8.8	306.3	154814223
CR300B305TAP-14"	304 S.S.	355.6	28.5	M10*30	305.3	8.8	325.5	154815233
CR300B305TAP	304 S.S.	368.3	28.5	M10*32	305.3	8.8	338.1	1548X2233
CR350B356TAP	304 S.S.	419.1	28.5	M10*36	356.1	8.8	388.9	154817243
CR35B25TAP-316	316 S.S.	69.5	12.7	M6*6	25.6	5.1	58.7	154804115
CR35B38TAP-316	316 S.S.	69.5	12.7	M6*6	38.3	5.1	58.7	154804135
CR35B42TAP-316	316 S.S.	69.5	12.7	M6*6	42.9	5.1	58.7	154804AG5
CR63B51TAP-316	316 S.S.	113.6	19	M8*8	51.1	6.3	92.1	154807145
CR63B63TAP-316	316 S.S.	113.6	19	M8*8	63.7	6.3	92.1	154807155
CR100B102TAP-316	316 S.S.	151.6	21.5	M8*16	102.2	7.2	130.3	154809185
CR150B153TAP-316	316 S.S.	202.5	24	M8*20	153.1	8.2	181	154811205
CR200B204TAP-316	316 S.S.	253.2	24.7	M8*24	203.7	7.5	231.8	154813215
CR250B255TAP-316	316 S.S.	304	28.5	M8*32	255	8.8	284	1548X1225
CR275B255TAP-316	316 S.S.	336.5	28.5	M10*30	255	8.8	306.3	154814225
CR300B305TAP-14"-316	316 S.S.	355.6	28.5	M10*30	305.3	8.8	325.5	154815235
CR300B305TAP-316	316 S.S.	368.3	28.5	M10*32	305.3	8.8	338.1	1548X2235
CR350B356TAP-316	316 S.S.	419.1	28.5	M10*36	356.1	8.8	388.9	154817245

Note:Inch spec. refer to page 3-4

Dimension in mm unless otherwise noted

All information contained herein was current at time of publication, we reserve the right to change the design/specification for products improvement without notice.

Reducing Flange

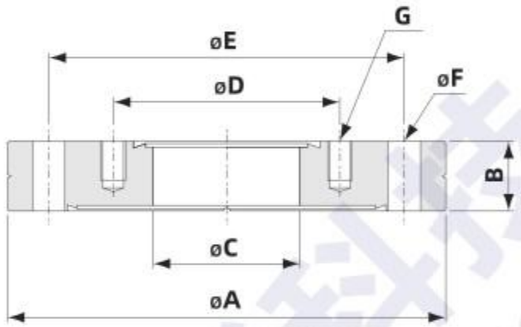

Model No.	Material	A	B	C	D	E	F*No.	G*No.	Thread Depth	Parts No.
CF35RF16	304 S.S.	69.5	12.7	15.8	26.9	58.7	6.7*6	M4*6	7	17480409052
CF63RF16	304 S.S.	113.6	18	15.8	26.9	92.1	8.4*8	M4*6	10	17480709052
CF63RF35	304 S.S.	113.6	18	38.1	58.7	92.1	8.4*8	M6*6	10	17480709082
CF100RF35	304 S.S.	151.6	20	38.1	58.7	130.3	8.4*16	M6*6	12	17480909082
CF100RF63	304 S.S.	151.6	20	63.5	92.1	130.3	8.4*16	M8*8	12	17480909132
CF150RF35	304 S.S.	202.5	22	38.1	58.7	181	8.4*20	M6*6	12	17481109082
CF150RF63	304 S.S.	202.5	22	63.5	92.1	181	8.4*20	M8*8	14	17481109132
CF150RF100	304 S.S.	202.5	22	101.6	130.3	181	8.4*20	M8*16	14	17481109152
CF200RF35	304 S.S.	253.2	24.7	38.1	58.7	231.8	8.4*24	M6*6	12	17481309082
CF200RF63	304 S.S.	253.2	24.7	63.5	92.1	231.8	8.4*24	M8*8	15	17481309132
CF200RF100	304 S.S.	253.2	24.7	101.6	130.3	231.8	8.4*24	M8*16	15	17481309152
CF200RF150	304 S.S.	253.2	24.7	152.4	181	231.8	8.4*24	M8*20	15	17481309172
CF275RF35	304 S.S.	336.5	28.5	38.1	58.7	306.3	10.3*30	M6*6	12	17481409082
CF275RF63	304 S.S.	336.5	28.5	63.5	92.1	306.3	10.3*30	M8*8	15	17481409132
CF275RF100	304 S.S.	336.5	28.5	101.6	130.3	306.3	10.3*30	M8*16	15	17481409152
CF275RF150	304 S.S.	336.5	28.5	152.4	181	306.3	10.3*30	M8*20	15	17481409172
CF275RF200	304 S.S.	336.5	28.5	203.2	231.8	306.3	10.3*30	M8*24	15	17481409192

Note:Inch spec. refer to page 3-4

Dimension in mm unless otherwise noted

All information contained herein was current at time of publication, we reserve the right to change the design/specification for products improvement without notice.

兴生机械科技
XingSheng Machinery Technology

03 CF SERIES

Half Nipple

Nonrotatable

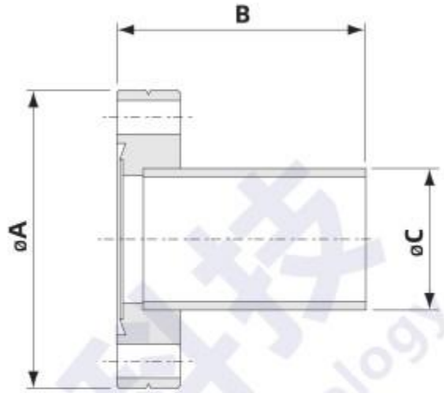

Model No.	Material	Inch spec.	A	B	C	Parts No.
CF16HN	304 S.S.	1-1/3"	33.8	38	19.05	155502093
CF35HN	304 S.S.	2-3/4"	69.5	63	38.1	155504133
CF63HN	304 S.S.	4-1/2"	113.6	105	63.5	155507153
CF100HN	304 S.S.	6"	151.6	135	101.6	155509183
CF150HN	304 S.S.	8"	202.5	167	152.4	155511203
CF200HN	304 S.S.	10"	253.2	167	203.2	155513213

Half Nipple

Rotatable

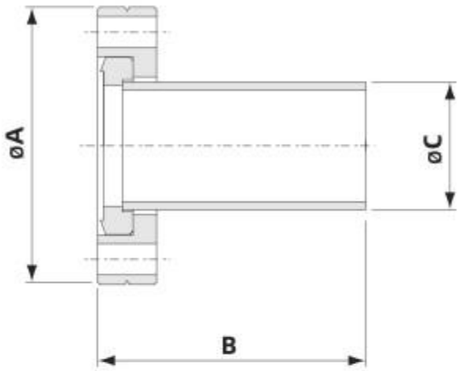

Model No.	Material	Inch spec.	A	B	C	Parts No.
CR16HN	304 S.S.	1-1/3"	33.8	38	19.05	155702093
CR35HN	304 S.S.	2-3/4"	69.5	63	38.1	155704133
CR63HN	304 S.S.	4-1/2"	113.6	105	63.5	155707153
CR100HN	304 S.S.	6"	151.6	135	101.6	155709183
CR150HN	304 S.S.	8"	202.5	167	152.4	155711203
CR200HN	304 S.S.	10"	253.2	167	203.2	155713213

Dimension in mm unless otherwise noted

All information contained herein was current at time of publication, we reserve the right to change the design/specification for products improvement without notice.

Plate Nut

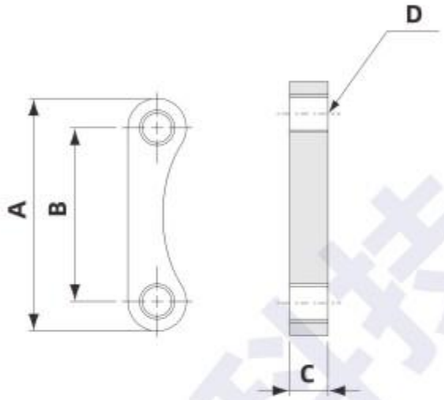

Model No.	Material	A	B	C	D	Parts No.
CF16PN	304 S.S.	19.5	13.5	4	M4	21320541
CF35PN	304 S.S.	39.5	29.5	6	M6	21320741
CF63PN	304 S.S.	50.2	35.2	8	M8	21321041
CF100PN	304 S.S.	40.4	25.4	8.2	M8	21321241
CF150PN	304 S.S.	43.3	28.3	8	M8	21321441
CF200PN	304 S.S.	45.3	30.3	8	M8	21321641

Cap

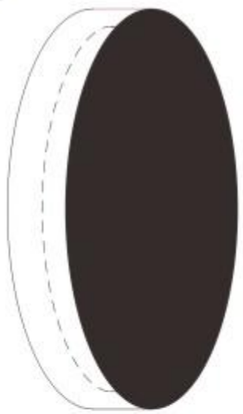

Model No.	Material	Fits Flange	Parts No.
CF16CAP	Polyethylene	CF16	5085EZ
CF35CAP	Polyethylene	CF35	5085GZ
CF63CAP	Polyethylene	CF63	5085H0
CF100CAP	Polyethylene	CF100	5085HY
CF150CAP	Polyethylene	CF150	5085HZ
CF200CAP	Polyethylene	CF200	5085LZ

Dimension in mm unless otherwise noted
All information contained herein was current at time of publication, we reserve the right to change the design/specification for products improvement without notice.

兴生机械科技
XingSheng Machinery Technology

03 CF SERIES

OFHC CF Copper Gasket

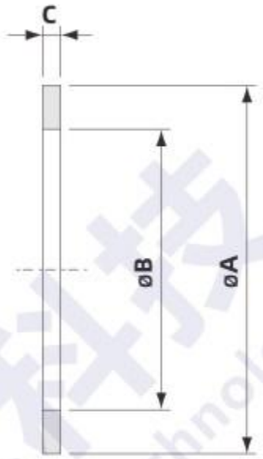

Model No.	A	B	C	Fits Flange	Inch spec.	Pack Quantity	Parts No.
CF16CG	21.3	16	2	CF16	1-1/3"	10	21310581
CF25CG	32.8	25.6	2	CF25	2-1/8"	10	21310681
CF35CG	48.2	36.9	2	CF35	2-3/4"	10	21310781
CF50CG	61.6	50.9	2	CF50	3-3/8"	10	21310981
CF63CG	82.4	63.5	2	CF63	4-1/2"	10	21311081
CF80CG	91.4	76.4	2	CF80	4-5/8"	10	21311181
CF100CG	120.5	101.7	2	CF100	6"	10	21311281
CF125CG	141.4	127.2	2	CF125	6-3/4"	10	21311381
CF150CG	171.1	152.5	2	CF150	8"	5	21311481
CF200CG	222	203.3	2	CF200	10"	5	21311681
CF250CG	272.9	254.2	2	CF250	12"	5	21311782
CF275CG	294.4	274.1	2	CF275	13-1/4"	5	21311781
CF300CG	326	305	2	CF300	14-1/2"	5	21311882
CF300CG-14"	313.1	300	2	CF300-14"	14"	5	21311881
CF350CG	376.7	356.5	2	CF350	16-1/2"	5	21312081

Dimension in mm unless otherwise noted
All information contained herein was current at time of publication, we reserve the right to change the design/specification for products improvement without notice.

OFHC Annealed Gasket

Model No.	A	B	C	Fits Flange	Inch spec.	Pack Quantity	Parts No.
CF16CGA	21.3	16	2	CF16	1-1/3"	5	213105N1
CF25CGA	32.8	25.6	2	CF25	2-1/8"	5	213106N1
CF35CGA	48.2	36.9	2	CF35	2-3/4"	5	213107N1
CF50CGA	61.6	50.9	2	CF50	3-3/8"	5	213109N1
CF63CGA	82.4	63.5	2	CF63	4-1/2"	5	213110N1
CF80CGA	91.4	76.4	2	CF80	4-5/8"	5	213111N1
CF100CGA	120.5	101.7	2	CF100	6"	5	213112N1
CF125CGA	141.4	127.2	2	CF125	6-3/4"	5	213113N1
CF150CGA	171.1	152.5	2	CF150	8"	5	213114N1
CF200CGA	222	203.3	2	CF200	10"	5	213116N1
CF250CGA	272.9	254.2	2	CF250	12"	1	213117N2
CF275CGA	294.4	274.1	2	CF275	13-1/4"	1	213117N1
CF300CGA	326	305	2	CF300	14-1/2"	1	213118N2
CF300CGA-14"	313.1	300	2	CF300-14"	14"	1	213118N1
CF350CGA	376.7	356.5	2	CF350	16-1/2"	1	213120N1

Dimension in mm unless otherwise noted

All information contained herein was current at time of publication, we reserve the right to change the design/specification for products improvement without notice.

兴生机械科技
XingSheng Machinery Technology

03 CF SERIES

OFHC+Silver plated Gasket

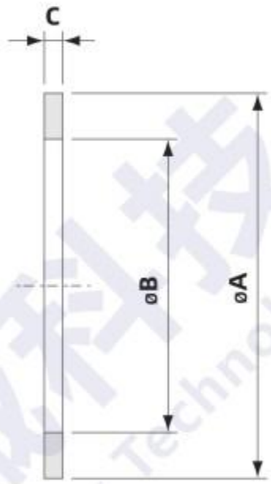

Model No.	A	B	C	Fits Flange	Inch spec.	Pack Quantity	Parts No.
CF16SPCG	21.3	16	2	CF16	1-1/3"	10	21310591
CF25SPCG	32.8	25.6	2	CF25	2-1/8"	10	21310691
CF35SPCG	48.2	36.9	2	CF35	2-3/4"	10	21310791
CF50SPCG	61.6	50.9	2	CF50	3-3/8"	10	21310991
CF63SPCG	82.4	63.5	2	CF63	4-1/2"	10	21311091
CF80SPCG	91.4	76.4	2	CF80	4-5/8"	10	21311191
CF100SPCG	120.5	101.7	2	CF100	6"	10	21311291
CF125SPCG	141.4	127.2	2	CF125	6-3/4"	10	21311391
CF150SPCG	171.1	152.5	2	CF150	8"	10	21311491
CF200SPCG	222	203.3	2	CF200	10"	10	21311691
CF250SPCG	272.9	254.2	2	CF250	12"	1	21311792
CF275SPCG	294.4	274.1	2	CF275	13-1/4"	1	21311791
CF300SPCG	326	305	2	CF300	14-1/2"	1	21311892
CF300SPCG-14"	313.1	300	2	CF300-14"	14"	1	21311891
CF350SPCG	376.7	356.5	2	CF350	16-1/2"	1	21312091

Dimension in mm unless otherwise noted

All information contained herein was current at time of publication, we reserve the right to change the design/specification for products improvement without notice.

Viton Gasket

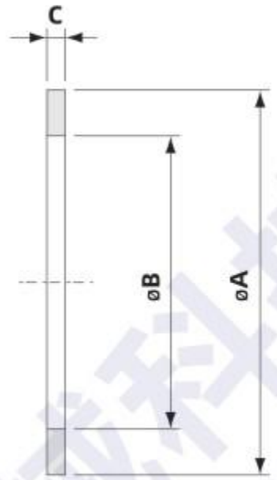

Model No.	A	B	C	Fits Flange	Inch spec.	Pack Quantity	Parts No.
CF16VG	21.3	16	3	CF16	1-1/3"	10	213105C1
CF25VG	32.8	26	3	CF25	2-1/8"	10	213106C1
CF35VG	48	37	3	CF35	2-3/4"	10	213107C1
CF50VG	61.6	51	3	CF50	3-3/8"	10	213109C1
CF63VG	82	64	3	CF63	4-1/2"	10	213110C1
CF80VG	91	77	3	CF80	4-5/8"	10	213111C1
CF100VG	120	101	3	CF100	6"	10	213112C1
CF125VG	141.2	127.4	3	CF125	6-3/4"	10	213113C1
CF150VG	171	152	3	CF150	8"	10	213114C1
CF200VG	222	203	3	CF200	10"	10	213116C1
CF250VG	272.7	254.4	3	CF250	12"	10	213117C2
CF275VG	294	269	3	CF275	13-1/4"	10	213117C1
CF300VG	325.8	305.2	3	CF300	14-1/2"	10	213118C2
CF300VG-14"	312.9	300.2	3	CF300-14"	14"	10	213118C1
CF350VG	376.7	359	3	CF350	16-1/2"	10	213120C1

Dimension in mm unless otherwise noted

All information contained herein was current at time of publication, we reserve the right to change the design/specification for products improvement without notice.

兴生机械科技
XingSheng Machinery Technology

03 CF SERIES

CF Flexible Hoses-One Flange Rotatable

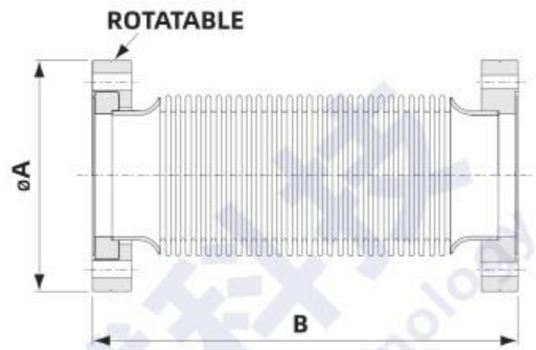

Model No.	Material	A	B	Parts No.
CF16FX250R	304 S.S.	33.8	250	40010550250FH
CF16FX500R	304 S.S.	33.8	500	40010550500FH
CF16FX750R	304 S,S,	33.8	750	40010550750FH
CF16FX1000R	304 S.S.	33.8	1000	40010551000FH
CF35FX250R	304 S.S.	69.5	250	40010570250FH
CF35FX500R	304 S.S.	69.5	500	40010570500FH
CF35FX750R	304 S.S.	69.5	750	40010570750FH
CF35FX1000R	304 S.S.	69.5	1000	40010571000FH
CF63FXC250R	304 S.S.	113.6	250	40310670250FH
CF63FXC500R	304 S.S.	113.6	500	40310670500FH
CF63FXC750R	304 S.S.	113.6	750	40310670750FH
CF63FXC1000R	304 S.S.	113.6	1000	40310671000FH
CF100FXC250R	304 S.S.	151.6	250	40310690250FH
CF100FXC500R	304 S.S.	151.6	500	40310690500FH
CF100FXC750R	304 S.S.	151.6	750	40310690750FH
CF100FXC1000R	304 S.S.	151.6	1000	40310691000FH

Note:Inch spec. refer to page 3-4

Dimension in mm unless otherwise noted

All information contained herein was current at time of publication, we reserve the right to change the design/specification for products improvement without notice.

CF Compressible Bellows Connections- On Flange Rotatable

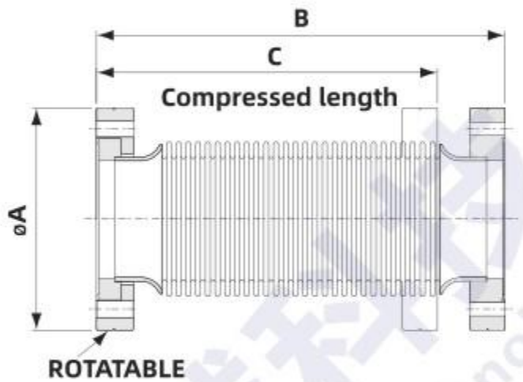

Model No.	Material Excluding Bellows	A	B	C	Parts No.
CF16FXC150R	304 S.S.	33.8	150	130	40310430150FH
CF35FXC180R	304 S.S.	69.5	180	160	40310450180FH
CF63FXC210R	304 S.S.	113.6	210	190	40310470210FH
CF100FXC270R	304 S.S.	151.6	270	250	40310490270FH

Note:Inch spec. refer to page 3-4

Dimension in mm unless otherwise noted

All information contained herein was current at time of publication, we reserve the right to change the design/specification for products improvement without notice.

兴生机械科技
XingSheng Machinery Technology

03 CF SERIES

CF Nipples-Fixed

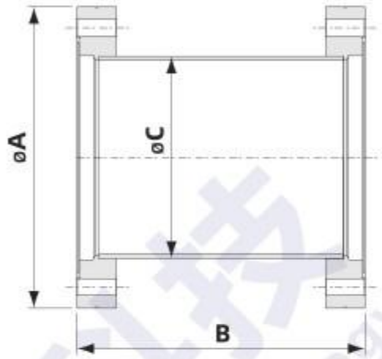

Model No.	Material	A	B	C	Parts No.
CF16N76	304 S.S.	33.8	76	19.05	160180280200764
CF35N126	304 S.S.	69.5	126	38.1	160180480401264
CF63N210	304 S.S.	113.6	210	63.5	160180780702104
CF100N270	304 S.S.	151.6	270	101.6	160180980902704
CF150N334	304 S.S.	202.5	334	152.4	160181181103344
CF200N334	304 S.S.	253.2	334	203.2	160181381303344

Note:Inch spec. refer to page 3-4 * Part number plus "K" for sand blasting surface
* Part number plus "L" for polished surface

CF Nipples-One Flange Rotatable

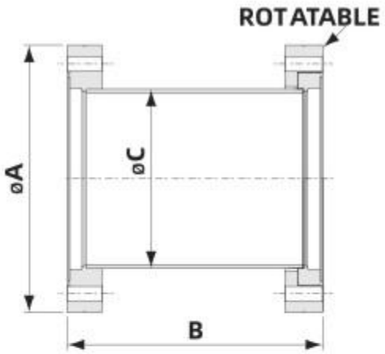

Model No.	Material	A	B	C	Parts No.
CF16NR76	304 S.S.	33.8	76	19.05	160160280200764
CF35NR126	304 S.S.	69.5	126	38.1	160160480401264
CF63NR210	304 S.S.	113.6	210	63.5	160160780702104
CF100NR270	304 S.S.	151.6	270	101.6	160160980902704
CF150NR334	304 S.S.	202.5	334	152.4	160161181103344
CF200NR334	304 S.S.	253.2	334	203.2	160161381303344

Note:Inch spec. refer to page 3-4 * Part number plus "K" for sand blasting surface
* Part number plus "L" for polished surface

Dimension in mm unless otherwise noted

All information contained herein was current at time of publication, we reserve the right to change the design/specification for products improvement without notice.

CF 90° Elbows-Fixed

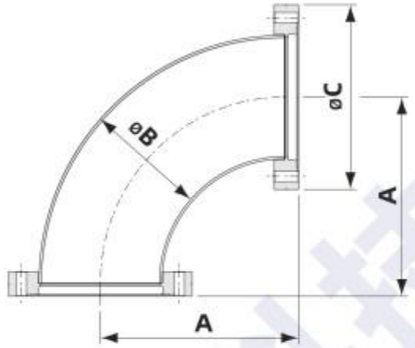

Model No.	Material	A	B	C	Parts No.
CF16EL90	304 S.S.	37.5	19.05	33.8	16038028024
CF35EL90	304 S.S.	79.9	38.1	69.5	16038048044
CF63EL90	304 S.S.	141.3	63.5	113.6	16038078074
CF100EL90	304 S.S.	222.2	101.6	151.6	16038098094
CF150EL90	304 S.S.	241.3	152.4	202.5	16038118114
CF200EL90	304 S.S.	215.9	219.08	253.2	160381381342A
CF250EL90	304 S.S.	266.7	273.05	336.5	160381481442A

Note:Inch spec. refer to page 3-4 * Part number plus "K" for sand blasting surface
* Part number plus "L" for polished surface

CF90° Elbows-Rotatable

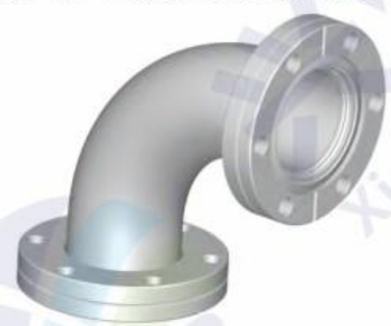

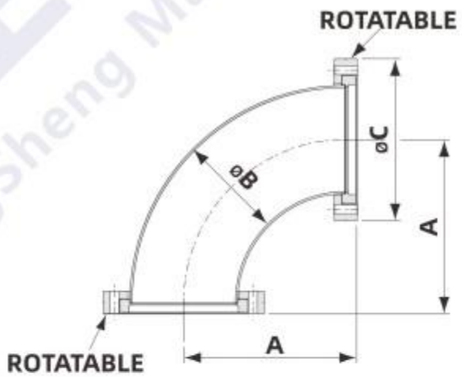

Model No.	Material	A	B	C	Parts No.
CR16EL90	304 S.S.	47.2	19.05	33.8	16036026024
CR35EL90	304 S.S.	79.8	38.1	69.5	16036046044
CR63EL90	304 S.S.	141.3	63.5	113.6	16036076074
CR100EL90	304 S.S.	222.2	101.6	151.6	16036096094
CR150EL90	304 S.S.	241.3	152.4	202.5	16036116114
CR200EL90	304 S.S.	215.9	219.08	253.2	160361361342A
CR250EL90	304 S.S.	266.7	273.05	336.5	160361461442A

Note:Inch spec. refer to page 3-4 * Part number plus "K" for sand blasting surface
* Part number plus "L" for polished surface

Dimension in mm unless otherwise noted

All information contained herein was current at time of publication, we reserve the right to change the design/specification for products improvement without notice.

兴生机械科技
XingSheng Machinery Technology

03 CF SERIES

CF Tees-Fixed

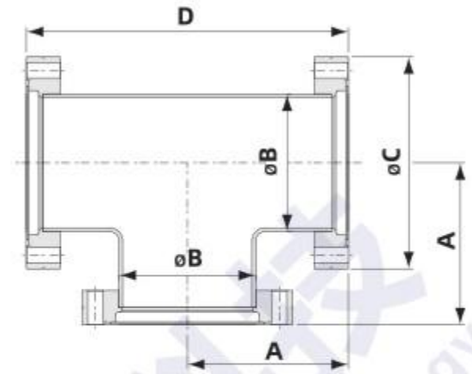

Model No.	Material	A	B	C	D	Parts No.
CF16T	304 S.S.	37.5	19.05	33.8	75	16158028024
CF35T	304 S.S.	62.5	38.1	69.5	125	16158048044
CF63T	304 S.S.	85.7	63.5	113.6	171.4	16158078074
CF100T	304 S.S.	109.5	101.6	151.6	219	16158098094
CF150T	304 S.S.	139.7	152.4	202.5	279.4	16158118114

Note:Inch spec. refer to page 3-4 * Part number plus "K" for sand blasting surface
* Part number plus "L" for polished surface

CF Tees- Two Flange Rotatable

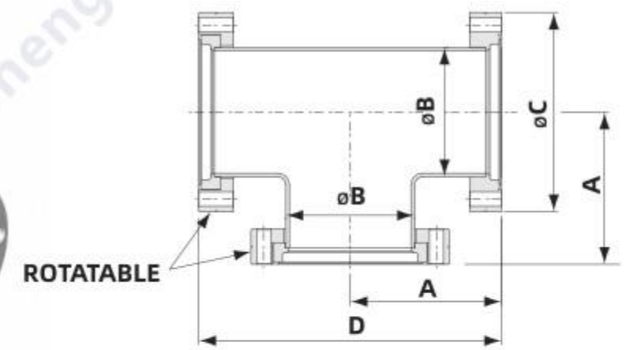

Model No.	Material	A	B	C	D	Parts No.
CR16T	304 S.S.	47.2	19.05	33.8	94.4	16156028024
CR35T	304 S.S.	62.5	38.1	69.5	125	16156048044
CR63T	304 S.S.	85.7	63.5	113.6	171.4	16156078074
CR100T	304 S.S.	109.5	101.6	151.6	219	16156098094
CR150T	304 S.S.	139.7	152.4	202.5	279.4	16156118114

Note:Inch spec. refer to page 3-4 * Part number plus "K" for sand blasting surface
* Part number plus "L" for polished surface

Dimension in mm unless otherwise noted

All information contained herein was current at time of publication, we reserve the right to change the design/specification for products improvement without notice.

CF 4 Way Crosses-Fixed

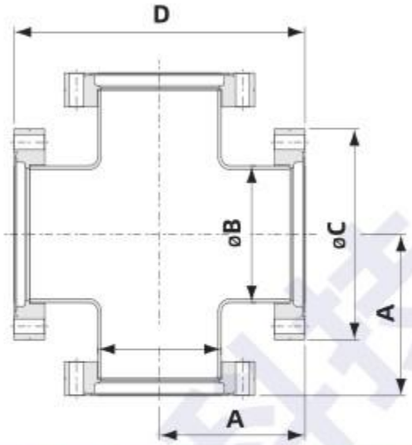

Model No.	Material	A	B	C	D	Parts No.
CF16X	304 S.S.	37.5	19.05	33.8	75	16198028024
CF35X	304 S.S.	62.5	38.1	69.5	125	16198048044
CF63X	304 S.S.	85.7	63.5	113.6	171.4	16198078074
CF100X	304 S.S.	109.5	101.6	151.6	219	16198098094
CF150X	304 S.S.	139.7	152.4	202.5	279.4	16198118114

Note:Inch spec. refer topage 3-4 * Part number plus "K" for sand blasting surface
* Part number plus "L" for polished surface

CF 4 Way Crosses-Two Flange Rotatable

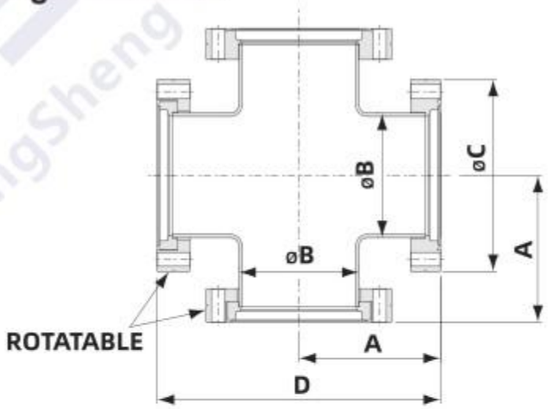

Model No.	Material	A	B	C	D	Parts No.
CR16X	304 S.S.	47.2	19.05	33.8	94.4	16196028024
CR35X	304 S.S.	62.5	38.1	69.5	125	16196048044
CR63X	304 S.S.	85.7	63.5	113.6	171.4	16196078074
CR100X	304 S.S.	109.5	101.6	151.6	219	16196098094
CR150X	304 S.S.	139.7	152.4	202.5	279.4	16196118114

Note:Inch spec. refer to page 3-4 * Part number plus "K" for sand blasting surface
* Part number plus "L" for polished surface

Dimension in mm unless otherwise noted
All information contained herein was current at time of publication, we reserve the right to change the design/specification for products improvement without notice.

兴生机械科技 XingSheng Machinery Technology

03 CF SERIES

CF Five-Way Crosses-Fixed

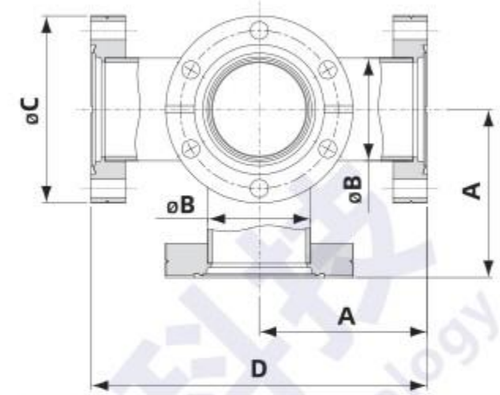

Model No.	Material	A	B	C	D	Parts No.
CF16FXA	304 S.S.	37.5	19.05	33.8	75	16268028024
CF35FXA	304 S.S.	62.5	38.1	69.5	125	16268048044
CF63FXA	304 S.S.	85.7	63.5	113.6	171.4	16268078074
CF100FXA	304 S.S.	109.5	101.6	151.6	219	16268098094
CF150FXA	304 S.S.	139.7	152.4	202.5	279.4	16268118114

Note:Inch spec. refer to page 3-4 * Part number plus "K" for sand blasting surface
* Part number plus "L" for polished surface

CF Five-Way Crosses-Three Flange Rotatable

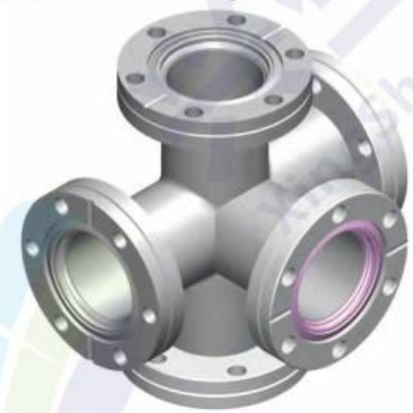

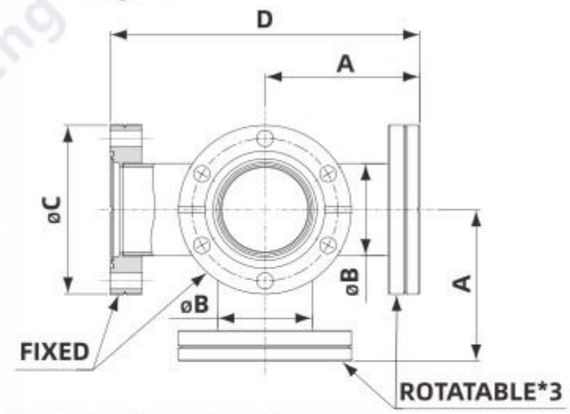

Model No.	Material	A	B	C	D	Parts No.
CR16FXA	304 S.S.	47.2	19.05	33.8	94.4	16266028024
CR35FXA	304 S.S.	62.5	38.1	69.5	125	16266048044
CR63FXA	304 S.S.	85.7	63.5	113.6	171.4	16266078074
CR100FXA	304 S.S.	109.5	101.6	151.6	219	16266098094
CR150FXA	304 S.S.	139.7	152.4	202.5	279.4	16266118114

* Part number plus "K" for sand blasting surface
* Part number plus "L" for polished surface

Dimension in mm unless otherwise noted
All information contained herein was current at time of publication, we reserve the right to change the design/specification for products improvement without notice.

CF Six-Way Crosses-Fixed

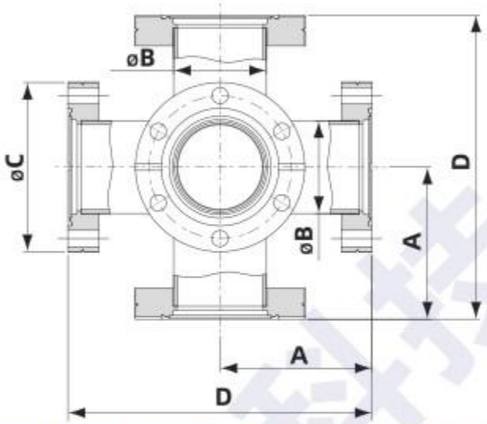

Model No.	Material	A	B	C	D	Parts No.
CF16SXA	304 S.S.	37.5	19.05	33.8	75	16288028024
CF35SXA	304 S.S.	62.5	38.1	69.5	125	16288048044
CF63SXA	304 S.S.	85.7	63.5	113.6	171.4	16288078074
CF100SXA	304 S.S.	109.5	101.6	151.6	219	16288098094
CF150SXA	304 S.S.	139.7	152.4	202.5	279.4	16288118114

Note:Inch spec. refer to page 3-4 * Part number plus "K" for sand blasting surface
* Part number plus "L" for polished surface

CF Six-Way Crosses- Three Flange Rotatable

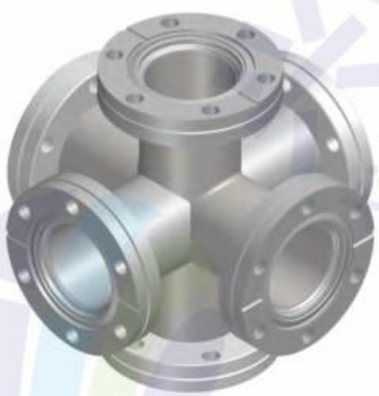

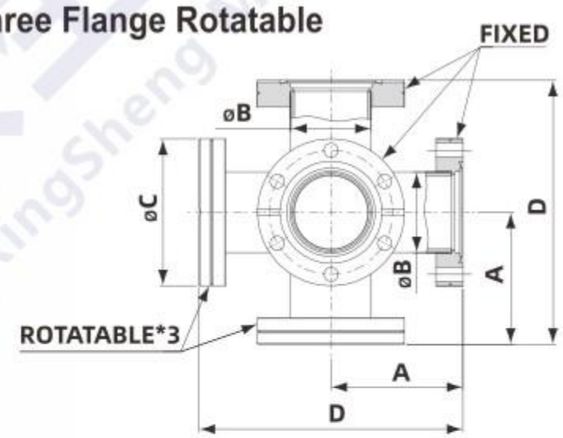

Model No.	Material	A	B	C	D	Parts No.
CR16SXA	304 S.S.	47.2	19.05	33.8	94.4	16286028024
CR35SXA	304 S.S.	62.5	38.1	69.5	125	16286048044
CR63SXA	304 S.S.	85.7	63.5	113.6	171.4	16286078074
CR100SXA	304 S.S.	109.5	101.6	151.6	219	16286098094
CR150SXA	304 S.S.	139.7	152.4	202.5	279.4	16286118114

Note:Inch spec. refer to page 3-4 * Part number plus "K" for sand blasting surface
* Part number plus "L" for polished surface

Dimension in mm unless otherwise noted
All information contained herein was current at time of publication, we reserve the right to change the design/specification for products improvement without notice.

兴生机械科技
XingSheng Machinery Technology

03 CF SERIES

CF CUBES with Fractional Thread

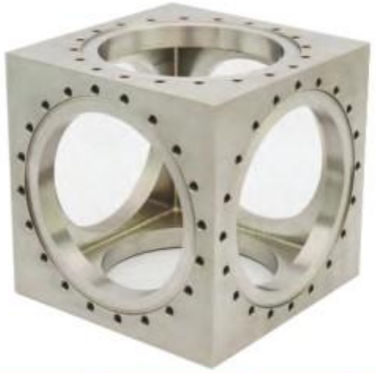

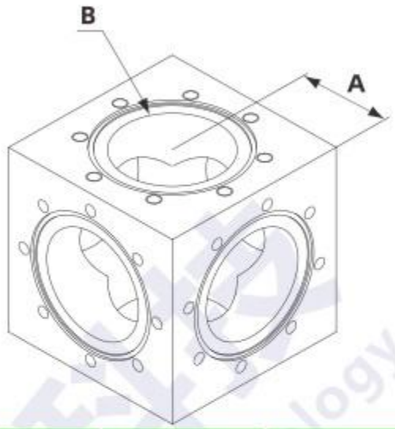

Model No.	Flange size	Material	A	B	Thread Size	Thread Depth	Parts No.
CF16CUF	CF16	304 S.S.	17.25	15.7	8-32	6.35	16809029024
CF35CUF	CF35	304 S.S.	35.05	38.1	.250-28	9.4	16809049044
CF50CUF	CF50	304 S.S.	43	50.8	.312-24	9.4	16809069064
CF63CUF	CF63	304 S.S.	56.65	63.5	.312-24	12.7	16809079074
CF100CUF	CF100	304 S.S.	76.2	102	.312-24	12.7	16809099094
CF150CUF	CF150	304 S.S.	101.6	152.4	.312-24	12.7	16809119114
CF200CUF	CF200	304 S.S.	127	203.2	.312-24	12.7	16809139134

Note:Inch spec. refer to page 3-4

CF CUBES with Metric Thread

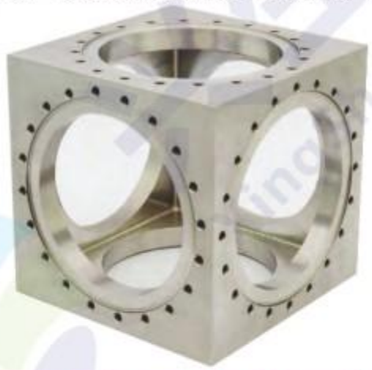

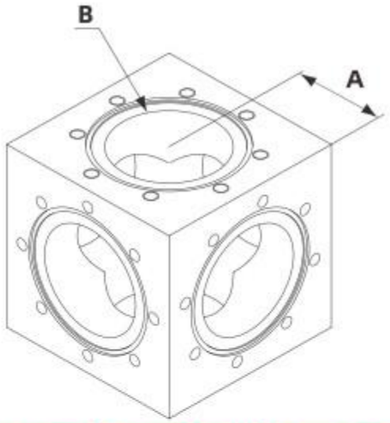

Model No.	Flange size	Material	A	B	Thread Size	Thread Depth	Parts No.
CF16CUM	CF16	304 S.S.	17.25	15.7	M4	6	16819029024
CF35CUM	CF35	304 S.S.	35.05	38.1	M6	9	16819049044
CF50CUM	CF50	304 S.S.	43	50.8	M8	9	16819069064
CF63CUM	CF63	304 S.S.	56.65	63.5	M8	12	16819079074
CF100CUM	CF100	304 S.S.	76.2	102	M8	12	16819099094
CF150CUM	CF150	304 S.S.	101.6	152.4	M8	12	16819119114
CF200CUM	CF200	304 S.S.	127	203.2	M8	12	16819139134

Note:Inch spec. refer to page 3-4

Dimension in mm unless otherwise noted
All information contained herein was current at time of publication, we reserve the right to change the design/specification for products improvement without notice.

04 FITTING SERIES

General Information 4-2
Pipe Wall Thickness in mm 4-3
Pipe Wall Thickness in inch 4-4
Tube Wall Thickness in mm 4-5
Tube Wall Thickness in inch 4-6
ASTM A269 Tubing Pressure Ratings 4-7
ASTM A312 Pipe Pressure Ratings 4-10
Corrosion Resistance Guide 4-12
Conical Reducers 4-13
90° Elbows 4-14
90° Elbows with Tangents 4-14
45° Elbows 4-15
45° Elbows with Tangents 4-15
Tees 4-16
4-Way Crosses 4-16
Unequal Tees 4-17
Unequal 4-Ways Crosses 4-17
Five-Way Crosses 4-18
Six-Way Crosses 4-18

General Information

Feature

- Htc tube fittings are convenient "building block" components. They offer great flexibility in the design and construction of high and ultra-high vacuum system.
- There are two type of bellows of Htc's products, or flexible metal hoses. "Flexible hoses" have concertina walls made by pressurizing a thin-wall tube, they can be bent but not be compressed. The other type is "Flexible bellows connections", this type can bent and compressed. When possible, design the system so that the bellows make only a single bend or curve. Multiple bends concentrate stress at minimum radius points, reducing life expectancy during flexing or vibration. An elbow on one or both ends will usually eliminate multiple bends. It is difficult to make a short bellows fit between parallel flange faces that are not coaxial.

Specifications

- Fittings:304 S.S. (Other material available upon request)
- Htc tube fitting are made from welded pipe or tube.
- Larger or special size available upon request
- Seamless pipe or tube are available upon request.

Applications

- Piping system

Tube and Pipe O.D. Designator

Tube		Pipe (ANSI B36.19)		Pipe (JIS G3459)		IDF		3A		ISO		DIN (DIN11850)	
Nom. Size	O.D.	Nom. Size	O.D.	Nom. Size	O.D.	Nom. Size	O.D.	Nom. Size	O.D.	Nom. Size	O.D.	Nom. Size	O.D.
1/8	3.18	1/8	10.29	6A	10.5								
3/16	4.76	3/16											
1/4	6.35	1/4	13.72	8A	13.8								
5/16	7.94	5/16											
3/8	9.53	3/8	17.15	10A	17.3						12	DN10	12
1/2	12.7	1/2	21.34	15A	21.7						17.2	15	18
5/8	15.88	5/8											
3/4	19.05	3/4	26.67	20A	27.2						21.3	20	22
7/8	22.23	7/8											
1	25.4	1	33.4	25A	34	1	25.4	1	25.4		25	25	28
1-1/4	31.8	1-1/4	42.16	32A	42.7	1-1/4	31.8				33.7	32	34
1-1/2	38.1	1-1/2	48.26	40A	48.6	1-1/2	38.1	1-1/2	38.1		38	40	40
											40		
2	50.8	2	60.33	50A	60.5	2	50.8	2	50.8		51	50	52
2-1/2	63.5	2-1/2	73.03	65A	76.3	2-1/2	63.5	2-1/2	63.5		63.5	65	70
											70		
3	76.2	3	88.9	80A	89.1	3	76.3	3	76.2		76.1	80	85
3-1/2	88.9	3-1/2	101.6	90A	101.6	3-1/2	89.1				88.9		
4	101.6	4	114.3	100A	114.3	4	101.6	4	101.6		101.6	100	104
	114.3										114.3		
5	127	5	141.3	125A	139.8							125	129
	139.8										139.7		
6	152.4	6	168.28	150A	165.2							150	154
	165.1										168.3		
8	203.2	8	219.08	200A	216.3						219.1		

JIS G3459 : Stainless Steel Pipes (Sch10)
IDF : International Daily Federation
3A : 3-A Sanitary Standards (International Association of Milk, Food and Environment Sanitariums, U.S Public Health Service)
ISO : International Organization for Standardization
DIN : Deutsches Insitut fur Nonmung (Germany DIN 11850)

All information contained herein was current at time of publication, we reserve the right to change the design/specification for products improvement without notice.

ANSI B36.19
Pipe Schedules (Metric Units)

		NOMINAL WALL THICKNESS IN MILLIMETRES													
Nominal Pipe Size In Inches	Outside Diameter In Millimetres	Sched 5	Sched 10	Sched 20	Sched 30	Standard	Sched 40	Sched 60	XS Exra Strong	Sched 80	Sched 100	Sched 120	Sched 140	Sched 160	XXS Double Strong
1/8	10.29	0.89	1.24			1.73	1.73		2.41	2.41					
1/4	13.72	1.24	1.65			2.24	2.24		3.02	3.02					
3/8	17.15	1.24	1.65			2.31	2.31		3.20	3.20					
1/2	21.34	1.65	2.11			2.77	2.77		3.73	3.73				4.75	7.46
3/4	26.67	1.65	2.11			2.87	2.87		3.91	3.91				5.53	7.82
1	33.40	1.65	2.77			3.38	3.38		4.55	4.55				6.35	9.09
1-1/4	42.16	1.65	2.77			3.56	3.56		4.85	4.85				6.35	9.70
1-1/2	48.26	1.65	2.77			3.68	3.68		5.08	5.08				7.13	10.16
2	60.33	1.65	2.77			3.91	3.91		5.54	5.54				8.71	11.07
2-1/2	73.03	2.11	3.05			5.16	5.16		7.01	7.01				9.53	14.02
3	88.9	2.11	3.05			5.49	5.49		7.62	7.62				11.10	15.24
3-1/2	101.6	2.11	3.05			5.74	5.74		8.08	8.08					16.15
4	114.3	2.11	3.05			6.02	6.02		8.56	8.56		11.10		13.48	17.12
5	141.3	2.77	3.40			6.55	6.55		9.53	9.53		12.70		15.87	19.05
6	168.28	2.77	3.40			7.11	7.11		10.97	10.97		14.27		18.23	21.95
8	219.08	2.77	3.76	6.35	7.04	8.18	8.18	10.31	12.70	12.70	15.06	18.23	20.62	23.01	22.23
10	273.05	3.40	4.19	6.35	7.79	9.27	9.27	12.70	12.70	15.06	18.23	21.41	25.40	28.57	
12	323.85	4.19	4.57	6.35	8.38	9.53	10.31	14.27	12.70	17.45	21.41	25.40	28.57	33.32	
14	355.6		6.35	7.92	9.53	9.53	11.12	15.06	12.70	19.05	23.80	27.76	31.75	35.71	
16	406.4		6.35	7.92	9.53	9.53	12.70	16.66	12.70	21.41	26.19	30.93	36.52	40.46	
18	457.2		6.35	7.92	11.10	9.53	14.27	19.05	12.70	23.80	29.36	34.92	39.67	45.24	
20	508.0		6.35	9.53	12.70	9.53	15.06	20.62	12.70	26.19	32.51	38.10	44.45	49.99	
22	558.8		6.35			9.53			12.70						
24	609.6		6.35	9.53	14.27	9.53	17.45	24.59	12.70	30.94	38.89	46.02	52.37	59.51	
26	660.4					9.53			12.70						
30	762.0		7.925	12.7		9.53			12.70						
34	863.6					9.53			12.70						
36	914.4					9.53			12.70						

Pipe Wall Thinkness in mm

Dimension in mm unless otherwise noted

All information contained herein was current at time of publication, we reserve the right to change the design/specification for products improvement without notice.

兴生机械科技
XingSheng Machinery Technology

04 FITING SERIES

ANSI B36.19
Pipe Schedules (Inches Units)

		NOMINAL WALL THICKNESS IN INCHES													
Nominal Pipe Size In Inches	Outside Diameter In Millimetres	Sched 5	Sched 10	Sched 20	Sched 30	Standard	Sched 40	Sched 60	XS Exra Strong	Sched 80	Sched 100	Sched 120	Sched 140	Sched 160	XXS Double Strong
1/8	0.405	0.035	0.049			0.068	0.068		0.095	0.095					
1/4	0.540	0.049	0.065			0.088	0.088		0.119	0.119					
3/8	0.675	0.049	0.065			0.091	0.091		0.126	0.126					
1/2	0.840	0.065	0.083			0.109	0.109		0.147	0.147				0.187	0.294
3/4	1.050	0.065	0.083			0.113	0.113		0.154	0.154				0.218	0.308
1	1.315	0.065	0.109			0.133	0.133		0.179	0.179				0.250	0.358
1-1/4	1.660	0.065	0.109			0.140	0.140		0.191	0.191				0.250	0.382
1-1/2	1.900	0.065	0.109			0.145	0.145		0.200	0.200				0.281	0.400
2	2.375	0.065	0.109			0.154	0.154		0.218	0.218				0.343	0.436
2-1/2	2.875	0.083	0.120			0.203	0.203		0.276	0.276				0.375	0.552
3	3.5	0.083	0.120			0.216	0.216		0.300	0.300				0.438	0.600
3-1/2	4.0	0.083	0.120			0.226	0.226		0.318	0.318					0.636
4	4.5	0.083	0.120			0.237	0.237	0.281	0.337	0.337		0.438		0.531	0.674
5	5.563	0.109	0.134			0.258	0.258		0.375	0.375		0.500		0.625	0.750
6	6.625	0.109	0.134			0.280	0.280		0.432	0.432		0.562		0.718	0.864
8	8.625	0.109	0.148	0.250	0.277	0.322	0.322	0.406	0.500	0.500	0.593	0.718	0.812	0.906	0.875
10	10.75	0.134	0.165	0.250	0.307	0.365	0.365	0.500	0.500	0.593	0.718	0.843	1.000	1.125	
12	12.75	0.165	0.180	0.250	0.330	0.375	0.406	0.562	0.500	0.687	0.843	1.000	1.125	1.312	
14	14.0		0.250	0.312	0.375	0.375	0.438	0.593	0.500	0.750	0.937	1.093	1.250	1.406	
16	16.0		0.250	0.312	0.375	0.375	0.500	0.656	0.500	0.843	1.031	1.218	1.438	1.593	
18	18.0		0.250	0.312	0.438	0.375	0.562	0.750	0.500	0.937	1.156	1.375	1.562	1.781	
20	20.0		0.250	0.375	0.500	0.375	0.593	0.812	0.500	1.031	1.281	1.500	1.750	1.968	
22	22.0		0.250	0.375	0.500	0.375		0.875	0.500	1.125	1.375	1.625	1.875	2.125	
24	24.0		0.250	0.375	0.562	0.375	0.687	0.968	0.500	1.218	1.531	1.812	2.062	2.343	
26	26.0		0.312	0.500		0.375			0.500						
28	28.0		0.312	0.500	0.625	0.375			0.500						
30	30.0		0.312	0.500	0.625	0.375			0.500						
32	32.0		0.312	0.500	0.625	0.375	0.688		0.500						
34	34.0		0.344	0.500	0.625	0.375	0.688		0.500						
36	36.0		0.312	0.500	0.625	0.375	0.750		0.500						

Pipe Wall Thickness in inch

Dimension in mm unless otherwise noted

All information contained herein was current at time of publication, we reserve the right to change the design/specification for products improvement without notice.

Birmingham Wire Gage (BWG) and Wall Thickness in mm

TUBE		20 0.889	19 1.067	18 1.245	17 1.473	16 1.651	15 1.829	14 2.108	13 2.413	12 2.769	11 3.048	10 3.404	9 3.759	8 4.191	7 4.572	6 5.156	5 5.588
O.D.	I.D.																
1/2	MIN.	10.72	10.36	9.957	9.474	9.068	8.687	8.077	7.391	6.604	5.994						
	NOM.	10.92	10.57	10.21	9.754	9.398	9.042	8.484	7.874	7.163	6.604						
5/8	MIN.	13.89	13.54	13.13	12.65	12.24	11.86	11.25	10.59	9.779	9.169	8.382	7.595	6.655	5.817		
	NOM.	14.10	13.74	13.39	12.93	12.57	12.22	11.66	11.05	10.34	9.779	9.068	8.357	7.493	6.731		
3/4	MIN.	17.07	16.71	16.31	15.82	15.42	15.06	14.43	13.77	12.95	12.34	11.56	10.77	9.83	8.992	7.696	6.756
	NOM.	17.27	16.92	16.56	16.10	15.75	15.39	14.83	14.22	13.51	12.95	12.24	11.53	10.67	9.906	8.738	7.874
7/8	MIN.	20.24	19.89	19.48	18.97	18.59	18.21	17.60	16.92	16.15	15.52	14.73	13.94	13.00	12.17	10.87	9.931
	NOM.	20.45	20.09	19.74	19.28	18.92	18.57	18.01	17.40	16.69	16.13	15.42	14.71	13.84	13.08	11.91	11.05
1	MIN.	23.42	23.06	22.66	22.17	21.77	21.39	20.78	20.09	19.33	18.69	17.93	17.15	16.18	15.34	14.05	13.11
	NOM.	23.62	23.27	22.91	22.45	22.10	21.74	21.18	20.57	19.86	19.30	18.59	17.88	17.02	16.26	15.09	14.22
1-1/8	MIN.	26.59	26.24	25.83	25.32	24.94	24.56	23.95	23.27	22.50	21.87	21.11	20.32	19.35	18.52	17.22	16.28
	NOM.	26.80	26.44	26.09	25.63	25.27	24.92	24.36	23.75	23.04	22.48	21.77	21.06	20.19	19.43	18.26	17.40
1-1/4	MIN.	29.77	29.41	29.01	28.50	28.12	27.74	27.13	26.44	25.68	25.04	24.28	23.50	22.53	21.69	20.40	19.46
	NOM.	29.97	29.62	29.26	28.80	28.45	28.09	27.53	26.92	26.21	26.65	24.94	24.23	23.37	22.61	21.44	20.57
1-3/8	MIN.	32.94	32.59	32.18	31.67	31.29	30.91	30.28	29.62	28.85	28.22	27.46	26.64	25.70	24.87	23.57	22.63
	NOM.	33.15	32.79	32.44	31.98	31.62	31.27	30.71	30.10	29.39	28.83	28.12	27.41	26.54	25.78	24.61	23.75
1-1/2	MIN.	36.12	35.76	35.36	34.85	34.47	34.09	33.48	32.79	32.00	31.39	30.61	29.82	28.88	28.04	26.75	25.81
	NOM.	36.32	36.22	35.61	35.15	34.80	34.44	33.88	33.27	32.56	32.00	61.29	30.58	29.72	28.96	27.79	26.92
1-3/4	MIN.	42.47	42.11	41.71	41.20	40.82	40.44	39.83	39.14	38.35	37.74	36.96	36.17	35.23	34.39	33.10	32.16
	NOM.	118.9	42.32	41.96	41.50	41.15	40.79	40.23	39.62	38.91	38.35	37.64	36.93	36.07	35.31	34.14	33.27
2	MIN.	48.82	48.46	48.06	47.55	47.17	46.79	46.15	45.49	44.70	44.09	43.31	42.52	41.58	40.74	39.45	38.51
	NOM.	49.02	48.67	48.31	47.85	47.50	47.14	46.58	45.97	45.26	44.70	43.99	43.28	42.42	41.66	40.49	39.62
2-1/4	MIN.	55.17	54.81	54.41	53.90	53.52	53.14	52.50	51.84	51.05	50.42	49.66	48.87	47.93	47.09	45.80	44.86
	NOM.	55.37	55.02	54.66	54.20	53.85	53.49	52.93	52.32	51.61	51.05	50.34	49.63	48.77	48.01	46.84	45.97
2-1/2	MIN.	61.52	61.16	60.76	60.25	59.87	59.49	58.85	58.19	57.40	56.79	56.01	55.22	54.28	53.44	52.15	51.21
	NOM.	61.72	61.37	61.01	60.55	60.20	59.84	59.28	58.67	57.96	57.40	56.69	55.98	55.12	54.36	53.19	52.32
2-3/4	MIN.	67.87	67.51	67.11	66.60	66.22	65.84	65.20	64.54	63.75	63.14	62.36	61.57	60.63	59.79	58.50	57.56
	NOM.	68.07	67.72	67.36	66.90	66.55	66.24	65.63	65.02	64.31	63.75	63.04	62.33	61.47	60.71	59.51	58.67
3	MIN.	74.22	73.86	73.46	72.95	72.57	72.19	71.55	70.89	70.10	69.49	68.71	67.92	66.95	66.14	64.85	63.91
	NOM.	74.92	74.07	73.71	73.25	72.90	72.54	71.98	71.37	70.66	70.10	69.39	68.68	67.82	67.06	65.89	65.02
3-1/4	MIN.	80.57	80.21	79.81	79.30	78.92	78.54	78.41	77.24	76.45	75.84	75.06	74.28	73.33	72.49	71.20	70.26
	NOM.	80.77	80.42	80.06	79.60	79.25	78.94	78.33	77.72	77.01	76.45	75.74	75.03	74.17	73.41	72.24	71.37
3-1/2	MIN.	86.92	86.56	86.16	85.65	85.27	84.89	84.25	83.59	82.80	82.19	81.41	80.62	79.68	78.84	77.55	76.61
	NOM.	87.12	86.77	86.41	85.95	85.60	85.24	84.68	84.07	83.36	82.80	82.09	81.38	80.52	79.76	78.59	77.72
3-3/4	MIN.	93.27	92.91	92.51	92.00	91.62	91.24	90.60	89.94	89.15	88.54	87.76	86.97	86.03	85.19	83.90	82.96
	NOM.	93.47	93.12	92.76	92.30	91.95	91.59	91.03	90.42	89.71	89.15	88.44	87.73	86.87	86.11	84.94	84.07
4	MIN.	99.62	99.26	98.86	98.50	97.97	97.59	96.95	96.29	95.50	94.89	94.11	93.32	92.38	91.54	90.25	89.31
	NOM.	99.82	99.47	99.11	98.65	98.30	97.94	97.38	96.77	96.06	96.01	94.79	94.08	93.22	92.46	91.29	90.42
4-1/2	MIN.	112.30	112.00	111.60	111.00	110.70	110.30	109.70	109.00	108.20	107.60	106.80	106.00	105.10	104.20	102.90	102.00
	NOM.	112.50	112.20	111.80	111.40	111.00	110.60	110.10	109.50	108.80	108.20	107.50	106.80	105.90	105.20	104.00	103.10
5	MIN.	125.00	124.70	124.30	123.70	123.40	123.00	122.40	121.70	120.90	120.30	119.50	118.70	117.80	116.90	115.60	114.70
	NOM.	125.20	124.90	124.50	124.10	123.70	123.30	122.80	122.20	121.50	120.90	120.20	119.50	118.60	117.90	116.70	115.80

Tube Wall Thickness in mm

Dimension in mm unless otherwise noted

All information contained herein was current at time of publication, we reserve the right to change the design/specification for products improvement without notice.

兴生机械科技
XingSheng Machinery Technology

04 FITING SERIES

Birmingham Wire Gage (BWG) and Wall Thickness in inches

TUBE		20 .035	19 .042	18 .049	17 .058	16 .065	15 .072	14 .083	13 .095	12 .109	11 .120	10 .134	9 .148	8 .165	7 .180	6 .203	5 .220
O.D.	I.D.																
1/2	MIN.	.422	.408	.392	.373	.357	.342	.318	.291	.260	.236						
	NOM.	.430	.416	.402	.384	.370	.356	.334	.310	.282	.260						
5/8	MIN.	.547	.533	.517	.498	.482	.467	.443	.417	.385	.361	.330	.299	.262	.229		
	NOM.	.555	.541	.527	.509	.495	.481	.459	.435	.407	.385	.357	.329	.295	.265		
3/4	MIN.	.672	.658	.642	.623	.607	.593	.568	.542	.510	.486	.455	.424	.387	.354	.303	.266
	NOM.	.680	.666	.652	.634	.620	.606	.584	.560	.532	.510	.482	.454	.420	.390	.344	.310
7/8	MIN.	.797	.783	.767	.747	.732	.717	.693	.666	.636	.611	.580	.549	.512	.479	.428	.391
	NOM.	.805	.791	.777	.759	.745	.731	.709	.685	.657	.635	.607	.579	.545	.515	.469	.435
1	MIN.	.922	.908	.892	.873	.857	.842	.818	.791	.761	.736	.706	.675	.637	.604	.553	.516
	NOM.	.930	.916	.902	.884	.870	.856	.834	.810	.782	.760	.732	.704	.670	.640	.594	.560
1-1/8	MIN.	1.047	1.033	1.017	.997	.982	.967	.943	.916	.886	.861	.831	.800	.762	.729	.678	.641
	NOM.	1.055	1.041	1.027	1.009	.995	.981	.959	.935	.907	.885	.857	.829	.795	.765	.719	.685
1-1/4	MIN.	1.172	1.158	1.142	1.122	1.107	1.092	1.068	1.041	1.011	.986	.956	.925	.887	.854	.803	.766
	NOM.	1.180	1.166	1.152	1.134	1.120	1.106	1.084	1.060	1.032	1.010	.982	.954	.920	.890	.844	.810
1-3/8	MIN.	1.297	1.283	1.267	1.247	1.232	1.217	1.192	1.166	1.136	1.111	1.081	1.049	1.012	.979	.928	.891
	NOM.	1.305	1.291	1.277	1.259	1.245	1.231	1.209	1.185	1.157	1.135	1.107	1.079	1.045	1.015	.969	.935
1-1/2	MIN.	1.422	1.408	1.392	1.372	1.357	1.342	1.318	1.291	1.260	1.236	1.205	1.174	1.137	1.104	1.053	1.016
	NOM.	1.430	1.426	1.402	1.384	1.370	1.356	1.334	1.310	1.282	1.260	1.232	1.204	1.170	1.140	1.094	1.060
1-3/4	MIN.	1.672	1.658	1.642	1.622	1.607	1.592	1.568	1.541	1.510	1.486	1.455	1.424	1.387	1.354	1.303	1.266
	NOM.	1.680	1.666	1.652	1.634	1.620	1.606	1.584	1.560	1.532	1.510	1.482	1.454	1.420	1.390	1.344	1.310
2	MIN.	1.922	1.908	1.892	1.872	1.857	1.842	1.817	1.791	1.760	1.736	1.705	1.674	1.637	1.604	1.553	1.516
	NOM.	1.930	1.916	1.902	1.884	1.870	1.856	1.834	1.810	1.782	1.760	1.732	1.704	1.670	1.640	1.594	1.560
2-1/4	MIN.	2.172	2.158	2.142	2.122	2.107	2.092	2.067	2.041	2.010	1.985	1.955	1.924	1.887	1.854	1.803	1.766
	NOM.	2.180	2.166	2.152	2.134	2.120	2.106	2.084	2.060	2.032	2.010	1.982	1.954	1.920	1.890	1.844	1.810
2-1/2	MIN.	2.422	2.408	2.392	2.372	2.357	2.342	2.317	2.291	2.260	2.236	2.205	2.174	2.137	2.104	2.053	2.016
	NOM.	2.430	2.416	2.402	2.384	2.370	2.356	2.334	2.310	2.282	2.260	2.232	2.204	2.170	2.140	2.094	2.060
2-3/4	MIN.	2.672	2.658	2.642	2.622	2.607	2.592	2.567	2.541	2.510	2.486	2.455	2.424	2.387	2.354	2.303	2.266
	NOM.	2.680	2.666	2.652	2.634	2.620	2.608	2.584	2.560	2.532	2.510	2.482	2.454	2.420	2.390	2.344	2.310
3	MIN.	2.922	2.908	2.892	2.872	2.857	2.842	2.817	2.791	2.760	2.736	2.705	2.674	2.636	2.604	2.553	2.516
	NOM.	2.930	2.916	2.902	2.884	2.870	2.856	2.834	2.810	2.782	2.760	2.732	2.704	2.670	2.640	2.594	2.560
3-1/4	MIN.	3.172	3.158	3.142	3.122	3.107	3.092	3.087	3.041	3.010	2.986	2.955	2.924	2.887	2.854	2.803	2.766
	NOM.	3.180	3.166	3.152	3.134	3.120	3.108	3.084	3.060	3.032	3.010	2.982	2.954	2.920	2.890	2.844	2.810
3-1/2	MIN.	3.422	3.408	3.392	3.372	3.357	3.342	3.317	3.291	3.260	3.236	3.205	3.174	3.137	3.104	3.053	3.016
	NOM.	3.430	3.416	3.402	3.384	3.370	3.356	3.334	3.310	3.282	3.260	3.232	3.204	3.170	3.140	3.094	3.060
3-3/4	MIN.	3.672	3.658	3.642	3.622	3.607	3.592	3.567	3.541	3.510	3.486	3.455	3.424	3.387	3.354	3.303	3.266
	NOM.	3.680	3.666	3.652	3.634	3.620	3.606	3.584	3.560	3.532	3.510	3.482	3.454	3.420	3.390	3.344	3.310
4	MIN.	3.922	3.908	3.892	3.872	3.857	3.842	3.817	3.791	3.760	3.736	3.705	3.674	3.637	3.604	3.553	3.516
	NOM.	3.930	3.916	3.902	3.884	3.870	3.856	3.834	3.810	3.782	3.780	3.732	3.704	3.670	3.640	3.594	3.560
4-1/2	MIN.	4.422	4.408	4.392	4.372	4.357	4.342	4.317	4.291	4.260	4.236	4.205	4.174	4.137	4.104	4.053	4.016
	NOM.	4.430	4.416	4.402	4.384	4.370	4.356	4.334	4.310	4.282	4.260	4.232	4.204	4.170	4.140	4.094	4.060
5	MIN.	4.922	4.908	4.892	4.872	4.857	4.842	4.817	4.791	4.760	4.736	4.705	4.674	4.637	4.604	4.553	4.516
	NOM.	4.930	4.916	4.902	4.884	4.870	4.856	4.834	4.810	4.782	4.760	4.732	4.704	4.670	4.640	4.594	4.560

Tube Wall Thickness in inch

Dimension in mm unless otherwise noted

All information contained herein was current at time of publication, we reserve the right to change the design/specification for products improvement without notice.

ASTM A269 WELDED & BRIGHT ANNEALED STAINLESS STEEL TUBING PRESSURE RATINGS

Nom. Size	Actual O.D.	Nom. Wall	Min. O.D.	Max. O.D.	Max. Ovality	Min. Wall	Weight / Ft	Burst Pressure *** (PSI)	Working Pressure *** (PSI)
1/4									
X .020	0.250	0.020	0.245	0.255	0.005	0.017	0.050	12,000	3,000
X .028	0.250	0.028	0.245	0.255	0.005	0.024	0.066	16,800	4,200
X .035	0.250	0.035	0.245	0.255	0.005	0.030	0.077	21,000	5,250
X .049	0.250	0.049	0.245	0.255	0.005	0.042	0.101	29,400	7,350
5/16									
X .020	0.313	0.020	0.308	0.318	0.005	0.017	0.064	9,585	2,396
X .028	0.313	0.028	0.308	0.318	0.005	0.024	0.085	13,419	3,355
X .035	0.313	0.035	0.308	0.318	0.005	0.030	0.099	16,773	4,193
X .049	0.313	0.049	0.308	0.318	0.005	0.042	0.132	23,482	5,871
3/8									
X .020	0.375	0.020	0.370	0.380	0.005	0.017	0.077	8,000	2,000
X .028	0.375	0.028	0.370	0.380	0.005	0.024	0.103	11,200	2,800
X .035	0.375	0.035	0.370	0.380	0.005	0.030	0.121	14,000	3,500
X .049	0.375	0.049	0.370	0.380	0.005	0.042	0.163	19,600	4,900
X .065	0.375	0.065	0.370	0.380	0.005	0.055	0.213	26,000	6,500
7/16									
X .035	0.437	0.035	0.432	0.442	0.005	0.030	0.150	12,014	3,003
X .065	0.437	0.065	0.432	0.442	0.005	0.055	0.256	22,311	5,578
1/2									
X .020	0.500	0.020	0.495	0.505	0.005	0.018	0.104	6,000	1,500
X .028	0.500	0.028	0.495	0.505	0.005	0.025	0.141	8,400	2,100
X .035	0.500	0.035	0.495	0.505	0.005	0.032	0.173	10,500	2,625
X .049	0.500	0.049	0.495	0.505	0.005	0.044	0.235	14,700	3,675
X .065	0.500	0.065	0.495	0.505	0.005	0.059	0.299	19,500	4,875
X .083	0.500	0.083	0.495	0.505	0.005	0.075	0.362	24,900	6,225
X .095	0.500	0.095	0.495	0.505	0.005	0.086	0.402	28,500	7,125
X .109	0.500	0.109	0.495	0.505	0.005	0.098	0.447	32,700	8,175
5/8									
X .020	0.625	0.020	0.620	0.630	0.008	0.018	0.132	4,800	1,200
X .028	0.625	0.028	0.620	0.630	0.008	0.025	0.178	6,720	1,680
X .035	0.625	0.035	0.620	0.630	0.008	0.032	0.220	8,400	2,100
X .042	0.625	0.042	0.623	0.628	0.003	0.040	0.268	10,080	2,520
X .049	0.625	0.049	0.620	0.630	0.008	0.044	0.300	11,760	2,940
X .065	0.625	0.065	0.620	0.630	0.005	0.059	0.384	15,600	3,900
X .083	0.625	0.083	0.620	0.630	0.005	0.075	0.470	19,920	4,980
X .095	0.625	0.095	0.620	0.630	0.005	0.086	0.524	22,800	5,700
X .109	0.625	0.109	0.620	0.630	0.005	0.098	0.588	26,160	6,540

Dimension in mm unless otherwise noted

All information contained herein was current at time of publication, we reserve the right to change the design/specification for products improvement without notice.

兴生机械科技
XingSheng Machinery Technology

04 FITING SERIES

ASTM A269 WELDED & BRIGHT ANNEALED STAINLESS STEEL TUBING PRESSURE RATINGS

Nom. Size	Actual O.D.	Nom. Wall	Min. O.D.	Max. O.D.	Max. Ovality	Min. Wall	Weight / Ft	Burst Pressure *** (PSI)	Working Pressure *** (PSI)
3/4									
X .020	0.750	0.020	0.745	0.755	0.008	0.018	0.159	4,000	1,000
X .025	0.750	0.025	0.745	0.755	0.008	0.023	0.207	5,000	1,250
X .028	0.750	0.028	0.745	0.755	0.008	0.025	0.215	5,600	1,400
X .035	0.750	0.035	0.745	0.755	0.008	0.032	0.266	7,000	1,750
X .049	0.750	0.049	0.745	0.755	0.008	0.044	0.365	9,800	2,450
X .065	0.750	0.065	0.745	0.755	0.005	0.059	0.47	13,000	3,250
X .083	0.750	0.083	0.745	0.755	0.005	0.075	0.577	16,600	4,150
X .095	0.750	0.095	0.745	0.755	0.005	0.086	0.646	19,000	4,750
X .109	0.750	0.109	0.745	0.755	0.005	0.098	0.729	21,800	5,450
7/8									
X .020	0.875	0.020	0.870	0.880	0.008	0.018	0.186	3,429	857
X .025	0.875	0.025	0.870	0.880	0.008	0.023	0.242	4,286	1,071
X .028	0.875	0.028	0.870	0.880	0.008	0.025	0.252	4,800	1,200
X .035	0.875	0.035	0.870	0.880	0.008	0.032	0.313	6,000	1,500
X .049	0.875	0.049	0.870	0.880	0.008	0.044	0.430	8,400	2,100
X .065	0.875	0.065	0.870	0.880	0.005	0.059	0.555	11,143	2,786
X .083	0.875	0.083	0.870	0.880	0.005	0.075	0.685	14,229	3,557
X .095	0.875	0.095	0.870	0.880	0.005	0.086	0.768	16,286	4,071
X .109	0.875	0.109	0.870	0.880	0.005	0.098	0.870	18,686	4,671
1									
X .020	1.000	0.020	0.995	1.005	0.008	0.018	0.213	3,000	750
X .028	1.000	0.028	0.995	1.005	0.008	0.025	0.289	4,200	1,050
X .035	1.000	0.035	0.995	1.005	0.008	0.032	0.359	5,250	1,313
X .049	1.000	0.049	0.995	1.005	0.008	0.044	0.496	7,350	1,838
X .065	1.000	0.065	0.995	1.005	0.005	0.059	0.640	9,750	2,438
X .083	1.000	0.083	0.995	1.005	0.005	0.075	0.792	12,450	3,113
X .095	1.000	0.095	0.995	1.005	0.005	0.086	0.891	14,250	3,563
X .109	1.000	0.109	0.995	1.005	0.005	0.098	1.011	16,350	4,088
6mm									
X 1mm	0.236	0.039	0.231	0.241	0.005	0.033	0.084	25,023	6,256
8mm X									
1mm	0.315	0.039	0.310	0.320	0.005	0.033	0.118	18,574	4,643
10mm X									
1mm	0.394	0.039	0.389	0.399	0.005	0.033	0.151	14,859	3,715
12mm X									
1mm	0.472	0.039	0.467	0.477	0.005	0.033	0.185	12,383	3,096
20mm X									
1mm	0.787	0.039	0.782	0.792	0.005	0.035	0.319	7,433	1,858

Dimension in mm unless otherwise noted

All information contained herein was current at time of publication, we reserve the right to change the design/specification for products improvement without notice.

Pressure Formula

Internal Burst = 2 St/D

- Where P = Internal pressure psi
- S = Tensile stress psi
- t = Minimum wall thickness in inches
- D = Nominal outside diameter in inches
- Working pressure = 1/4 internal burst pressure

Tensile Requirements (304, 304L, 316, 316L)

- A minimum of (2) tests per work order / heat number
- Minimum yield strength = 30,000 psi
- Minimum ultimate strength = 75,000 psi
- Minimum elongation = 35%

Hardness Requirements (304, 304L, 316, 316L)

- A minimum of (2) tests per work order / heat number
- Maximum hardness* = 74 30T or 90 RB

Not applicable to sizes < 0.250 I.D. unless specified

B.W.G. To Decimal Conversion Chart

B.W. GA.	DECIMAL EQUIV.	B.W. GA.	DECIMAL EQUIV.	B.W. GA.	DECIMAL EQUIV.	B.W. GA.	DECIMAL EQUIV.
1	0.300	10	0.134	19	0.042	28	0.014
2	0.284	11	0.120	20	0.035	29	0.013
3	0.259	12	0.109	21	0.032	30	0.012
4	0.238	13	0.095	22	0.028	31	0.010
5	0.220	14	0.083	23	0.025	32	0.009
6	0.203	15	0.072	24	0.022	33	0.008
7	0.180	16	0.065	25	0.020	34	0.007
8	0.165	17	0.058	26	0.018	35	0.005
9	0.148	18	0.049	27	0.016	36	0.004

Dimension in mm unless otherwise noted

All information contained herein was current at time of publication, we reserve the right to change the design/specification for products improvement without notice.

兴生机械科技
XingSheng Machinery Technology

04 FITING SERIES

ASTM A312 / ASME SA312 WELDED STAINLESS STEEL PIPE PRESSURE RATINGS

Nom. Size	Actual O.D.	Nom. Wall	Min. O.D.	Max. O.D.	Max. Ovality	Min. Wall	Weight / Ft	Burst Pressure *** (PSI)	Working Pressure *** (PSI)
1/8"									
Sch 5	0.405	0.035	0.395	0.413	0.006	0.031	0.136	12963	3241
Sch 10	0.405	0.049	0.395	0.413	0.006	0.043	0.184	18148	4537
Sch 40	0.405	0.068	0.395	0.413	0.006	0.060	0.239	25185	6296
1/4"									
Sch 5	0.540	0.049	0.530	0.548	0.006	0.043	0.253	13611	3403
Sch 10	0.540	0.065	0.530	0.548	0.006	0.057	0.333	18056	4514
Sch 40	0.540	0.088	0.530	0.548	0.006	0.077	0.408	24444	6111
3/8"									
Sch 10	0.675	0.065	0.665	0.683	0.006	0.057	0.427	14444	3611
Sch 40	0.675	0.091	0.665	0.683	0.006	0.080	0.543	20222	5056
1/2"									
Sch 5	0.840	0.065	0.830	0.848	0.010	0.057	0.543	11607	2902
Sch 10	0.840	0.083	0.830	0.848	0.010	0.073	0.643	14821	3705
Sch 40	0.840	0.109	0.830	0.848	0.010	0.095	0.808	19464	4866
Sch 80	0.840	0.147	0.830	0.848	0.010	0.129	1.059	26250	6563
3/4"									
Sch 5	1.050	0.065	1.040	1.058	0.010	0.057	0.690	9286	2321
Sch 10	1.050	0.083	1.040	1.058	0.010	0.073	0.820	11857	2964
Sch 40	1.050	0.113	1.040	1.058	0.010	0.099	1.079	16143	4036
Sch 80	1.050	0.154	1.040	1.058	0.010	0.135	1.426	22000	5500
1"									
Sch 5	1.315	0.065	1.305	1.323	0.010	0.057	0.875	7414	1854
Sch 10	1.315	0.109	1.305	1.323	0.010	0.095	1.327	12433	3108
Sch 40	1.315	0.133	1.305	1.323	0.010	0.116	1.590	15171	3793
Sch 80	1.315	0.179	1.305	1.323	0.010	0.157	2.085	20418	5105

Theoretical burst and working pressure in psi to 100 degrees F

Dimension in mm unless otherwise noted

All information contained herein was current at time of publication, we reserve the right to change the design/specification for products improvement without notice.

Pressure Formula

Internal Burst = 2 St/D

- Where P = Internal pressure psi
- S = Tensile stress psi
- t = Minimum wall thickness in inches
- D = Nominal outside diameter in inches
- Working pressure = 1/4 internal burst pressure

Tensile Requirements (304, 304L, 316, 316L)

- A minimum of (2) tests per work order / heat number
- Minimum yield strength = 30,000 psi
- Minimum ultimate strength = 75,000 psi
- Minimum elongation = 35%

Hardness Requirements (304, 304L, 316, 316L)

- A minimum of (2) tests per work order / heat number
- Maximum hardness* = 74 30T or 90 RB

Not applicable to sizes < 0.250 I.D. unless specified

All information contained herein was current at time of publication, we reserve the right to change the design/specification for products improvement without notice.

兴生机械科技
XingSheng Machinery Technology

04 FITING SERIES

Corrosion Resistance Guide

Media Conveyed or Atmosphere	Temperature	AISI type 304	AISI type 316
Acetone			
Acetyiene			
Sulfur.Deoxide (Moist)			
Sulfur.Deoxide (Dry)			
Ethyl Alcohol			
Methyl Alcohol			
Ammonia	R.T.		
Ammonia	Hot		
Sulfar (Dry)			
Sulfar (Wet)	R.T.		
Sulfar (Molten)			
Sulfar (Moist)	R.T.		
Ethylene Glvcol			
Ethers			
Alminum Chloride			
Iron Chloride			
Magnesium Chloride			
Chlorine (Dry)			
Chlorine (Moist)			
Hydrogen Peroxide	R.T.		
Hydrogen Peroxide	Boil		
Sea Water			
Gasoline			
Glycerin			
Crude Oil			
Ethyl Acetate			
Oxygen			
Carbon Tetrachloride (Dry)			
Carbon Tetrachloride with water			
Steam			
Oxalic Acid (<10%)	R.T.		
Oxalic Acid (10%)	Boil		
Oxalic Acid (>10%)			
Mercury			
Potassium Hydroxide (<10%)			
Potassium Hydroxide (10%~70%)	R.T.		
Potassium Hydroxide (50%)	Boil		
Barium Hydroxide (≦ 10%)			
Barium Hydroxide (100%~70%)	R.T.		
Bromium			
Tar			
Carbon Dioxide			

Media Conveyed or Atmosphere	Temperature	AISI type 304	AISI type 316
Carbonated Water			
Sodium Carbonate			
Nitrogen			
Trichlor Ethylene (Dry)			
Trichior Ethylene (Moist)			
Naphtha			
Benzene			
Hydrogen Sulfide (Dry)	H65°C		
Hydrogen Sulfide (Moise)			
Ammonium Sulfate (1%)	R.T.		
Ammonium Sulfate (5% Aeration)	R.T.		
Ammonium Sulfate (10%)	Boil		
Calcium Sulfate	R.T.		
Copper Sulfate Solution			
Sodium Sulfate (5%)	R.T.		
Sodium Sulfate (Conc)	R.T.		
Barium Sulfate	R.T.		
Phospholic Acid (≦ 5%)	R.T.		
Phospholic Acid (5~25%)			
Phospholic Acid (25~50%)			
Chloric Acid (<5%)			
Chloric Acid (≧ 5%)			
Nitric Acid (<50%)			
Nitric Acid (65%)	R.T.		
Nitric Acid (≧ 50%)	Boil		
Nitric Acid (Conc)	R.T.		
Nitric Acid (Conc)	Boil		
Sulfuric Acid (95~100%)			
Sulfuric Acid (75~95%)			
Sulfuric Acid (<75%)			
Sulfuric Acid (anhydrous)	R.T.		
Sulfuric Acid (anhydrous)	Boil		
Fluoric Acid			
Acetic Acid	R.T.		
Acetic Acid	Boil		
Sodium Hydroxide (<10%)			
Sodium Hydroxide (10~50%)	<100°C		
Sodium Hydroxide (10~50%)	Boil		
Sodium Hydroxide (50~70%)	<100°C		
Sodium Hydroxide (50~70%)	100°C~150°C		
Sodium Hydroxide (70~anhydrous)	<260°C		
Sodium Hydroxide (Molten)	<480°C		

: Suitable (normal conditions) : Limited Service : Unsuitable
Note : R.T. : Room Temperature

: Susceptible to pitting corrosion where contacting with air.

All information contained herein was current at time of publication, we reserve the right to change the design/specification for products improvement without notice.

Conical Reducers

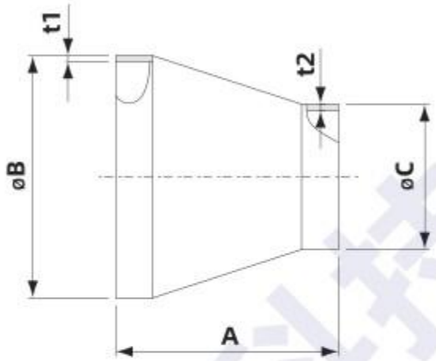

Model No.	Material	A	B	C	t1	t2	Parts No.
25-16CR	304 S.S.	35	25.4	19.05	1.65	1.65	16230030024
40-16CR	304 S.S.	60.3	38.1	19.05	1.65	1.65	16230050024
40-25CR	304 S.S.	60.3	38.1	25.4	1.65	1.65	16230050034
50-25CR	304 S.S.	60.3	50.8	25.4	1.65	1.65	16230060034
50-40CR	304 S.S.	60.3	50.8	38.1	1.65	1.65	16230060054
63-40CR	304 S.S.	60.3	63.5	38.1	1.65	1.65	16230070054
63-50CR	304 S.S.	60.3	63.5	50.8	1.65	1.65	16230070064
80-50CR	304 S.S.	92	76.2	50.8	1.65	1.65	16230080064
80-63CR	304 S.S.	92	76.2	63.5	1.65	1.65	16230080074
100-50CR	304 S.S.	92	101.6	50.8	2.1	1.65	16230090064
100-63CR	304 S.S.	92	101.6	63.5	2.1	1.65	16230090074
100-80CR	304 S.S.	92	101.6	76.2	2.1	1.65	16230090084
150-80CR	304 S.S.	152.4	152.4	76.2	2.77	1.65	16230110084
150-100CR	304 S.S.	152.4	152.4	101.6	2.77	2.1	16230110094

Dimension in mm unless otherwise noted

All information contained herein was current at time of publication, we reserve the right to change the design/specification for products improvement without notice.

兴生机械科技
XingSheng Machinery Technology

04 FITING SERIES

90° Elbows

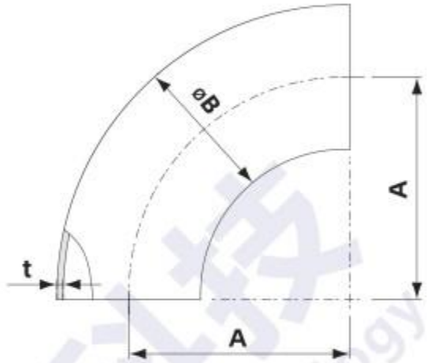

Model No.	Material	A	B	t	Parts No.
16EL90A	304 S.S.	28.6	19.05	1.65	16030020024
25EL90A	304 S.S.	38.1	25.4	1.65	16030030034
40EL90A	304 S.S.	57.2	38.1	1.65	16030050054
50EL90A	304 S.S.	76.2	50.8	1.65	16030060064
63EL90A	304 S.S.	95.2	63.5	1.65	16030070074
80EL90A	304 S.S.	114.3	76.2	1.65	16030080084
100EL90A	304 S.S.	152.4	101.6	2	16030090094
150EL90A	304 S.S.	228.6	152.4	2.7	16030110114

90° Elbows with Tangents

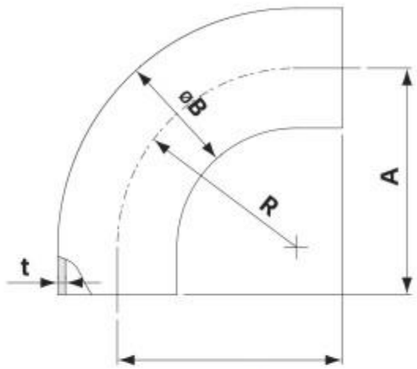

Model No.	Material	A	B	R	t	Parts No.
16ELT90A	304 S.S.	34.5	19.05	28.6	1.65	16240020024
25ELT90A	304 S.S.	52.4	24.5	38.1	1.65	16240030034
40ELT90A	304 S.S.	74.6	38.1	57.2	1.65	16240050054
50ELT90A	304 S.S.	103.2	50.8	76.2	1.65	16240060064
63ELT90A	304 S.S.	131.8	63.5	95.3	1.65	16240070074
80ELT90A	304 S.S.	160.3	76.2	114.3	1.65	16340080084
100ELT90A	304 S.S.	211.1	101.6	152.4	2	16240090094

Dimension in mm unless otherwise noted

All information contained herein was current at time of publication, we reserve the right to change the design/specification for products improvement without notice.

45° Elbows

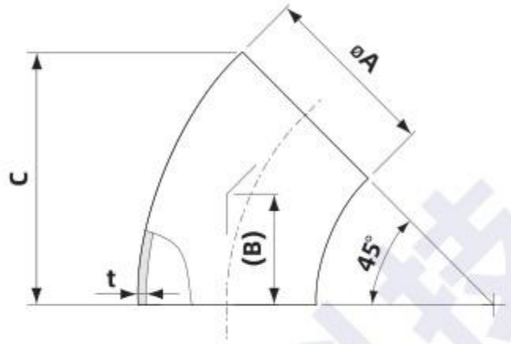

Model No.	Material	A	(B)	C	t	Parts No.
16EL45A	304 S.S.	19.05	(11.8)	26.94	1.65	16070020024
25EL45A	304 S.S.	25.4	(15.9)	36.12	1.65	16070030034
40EL45A	304 S.S.	38.1	(23.8)	54.10	1.65	16070050054
50EL45A	304 S.S.	50.8	(31.8)	72.25	1.65	16070060064
63EL45A	304 S.S.	63.5	(39.7)	90.22	1.65	16070070074
80EL45A	304 S.S.	76.2	(47.6)	108.2	1.65	16070080084
100EL45A	304 S.S.	101.6	(63.5)	144.32	2	16070090094

45° Elbows with Tangents

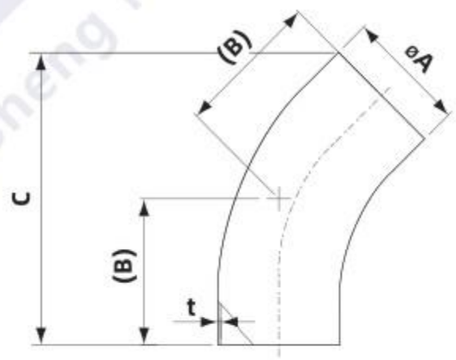

Model No.	Material	A	(B)	C	t	Parts No.
16ELT45A	304 S.S.	19.05	(19.3)	39.68	1.65	16250020024
25ELT45A	304 S.S.	25.4	(30.2)	60.53	1.65	16250030034
40ELT45A	304 S.S.	38.1	(41.3)	83.98	1.65	16250050054
50ELT45A	304 S.S.	50.8	(58.7)	118.17	1.65	16250060064
63ELT45A	304 S.S.	63.5	(76.2)	152.54	1.65	16250070074
80ELT45A	304 S.S.	76.2	(93.7)	186.89	1.65	16250080084
100ELT45A	304 S.S.	101.6	(122.2)	244.5	2	16250090094

Dimension in mm unless otherwise noted

All information contained herein was current at time of publication, we reserve the right to change the design/specification for products improvement without notice.

Tees

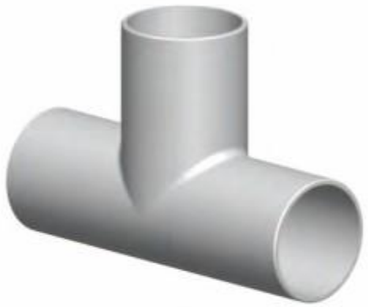

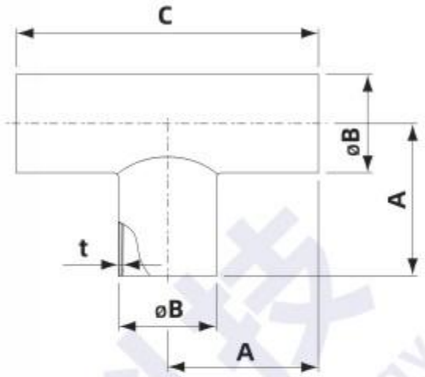

Model No.	Material	A	B	C	t	Parts No.
16TA	304 S.S.	34.5	19.05	69	1.65	16150020024
25TA	304 S.S.	47.6	25.4	95.2	1.65	16150030034
40TA	304 S.S.	57.2	38.1	114.3	1.65	16150050054
50TA	304 S.S.	76.2	50.8	152.4	1.65	16150060064
63TA	304 S.S.	76.2	63.5	152.4	1.65	16150070074
80TA	304 S.S.	82.5	76.2	165.1	1.65	16150080084
100TA	304 S.S.	98.4	101.6	196.8	2	16150090094
150TA	304 S.S.	127	152.4	254	2.7	16150110114

4-Way Crosses

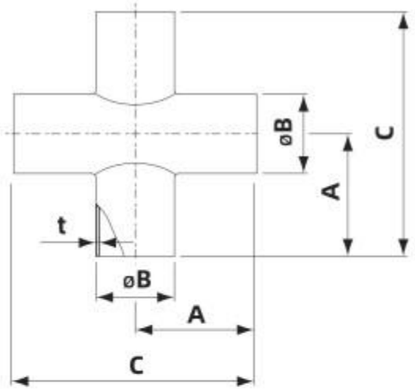

Model No.	Material	A	B	C	t	Parts No.
16XA	304 S.S.	34.5	19.05	69	1.65	16190020024
25XA	304 S.S.	47.6	25.4	95.2	1.65	16190030034
40XA	304 S.S.	57.2	38.1	114.3	1.65	16190050054
50XA	304 S.S.	76.2	50.8	152.4	1.65	16190060064
63XA	304 S.S.	76.2	63.5	152.4	1.65	16190070074
80XA	304 S.S.	82.5	76.2	165.1	1.65	16190080084
100XA	304 S.S.	98.4	101.6	196.8	2	16190090094
150XA	304 S.S.	127	152.4	254	2.7	16190110114

Dimension in mm unless otherwise noted

All information contained herein was current at time of publication, we reserve the right to change the design/specification for products improvement without notice.

Unequal Tees

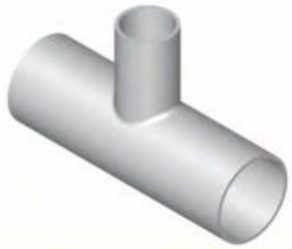

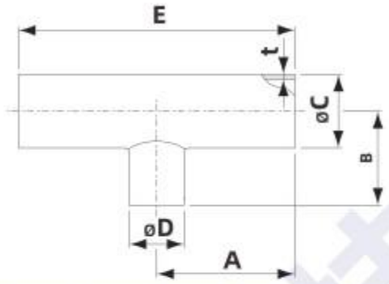

Model No.	Material	A	B	C	D	E	t	Parts No.
25UT16A	304 S.S.	48.2	33.7	25.4	19.05	96.4	1.65	16170030024
40UT16A	304 S.S.	57.2	48.2	38.1	19.05	114.3	1.65	16170050024
40UT25A	304 S.S.	57.2	54	38.1	25.40	114.3	1.65	16170050034
50UT16A	304 S.S.	76.2	54.4	50.8	19.05	152.4	1.65	16170060024
50UT25A	304 S.S.	76.2	60.3	50.8	25.40	152.4	1.65	16170060034
50UT40A	304 S.S.	76.2	63.5	50.8	38.10	152.4	1.65	16170060054
80UT63A	304 S.S.	82.5	82.5	76.2	63.50	165	1.65	16170080074
100UT50A	304 S.S.	98.4	101.6	101.6	50.80	196.8	2	16170090064
100UT63A	304 S.S.	98.4	95.3	101.6	63.50	196.8	2	16170090074
100UT80A	304 S.S.	98.4	95.3	101.6	76.20	196.8	2	16170090084
150UT80A	304 S.S.	127	120.7	152.4	76.20	254	2.77	16170110084
150UT100A	304 S.S.	127	123.8	152.4	101.6	254	2.77	16170110094

Unequal 4-Way Crosses

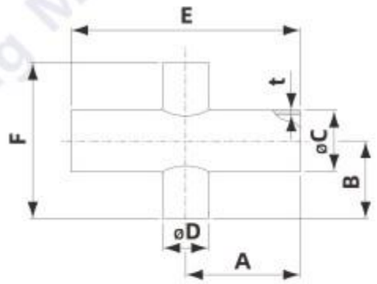

Model No.	Material	A	B	C	D	E	F	t	Parts No.
25UX16A	304 S.S.	48.2	33.7	25.4	19.05	96.4	67.4	1.65	16210030024
40UX16A	304 S.S.	57.2	48.2	38.1	19.05	114.3	96.4	1.65	16210050024
40UX25A	304 S.S.	57.2	54	38.1	25.4	114.3	108	1.65	16210050034
50UX16A	304 S.S.	76.2	54.4	50.8	19.05	152.4	108.8	1.65	16210060024
50UX25A	304 S.S.	76.2	60.3	50.8	25.4	152.4	120.6	1.65	16210060034
50UX40A	304 S.S.	76.2	63.5	50.8	38.1	152.4	127	1.65	16210060054
80UX63A	304 S.S.	82.5	82.5	76.2	63.5	165	165	1.65	16210080074
100UX50A	304 S.S.	98.4	101.6	101.6	50.8	196.8	203.2	2	16210090064
100UX63A	304 S.S.	98.4	95.3	101.6	63.5	196.8	190.6	2	16210090074
100UX80A	304 S.S.	98.4	95.3	101.6	76.2	196.8	190.6	2	16210090084
150UX80A	304 S.S.	127	120.7	152.4	76.2	254	241.4	2.77	16210110084
150UX100A	304 S.S.	127	123.8	152.4	101.6	254	247.6	2.77	16210110094

Dimension in mm unless otherwise noted

All information contained herein was current at time of publication, we reserve the right to change the design/specification for products improvement without notice.

兴生机械科技
XingSheng Machinery Technology

04 FITING SERIES

Five-Way Crosses

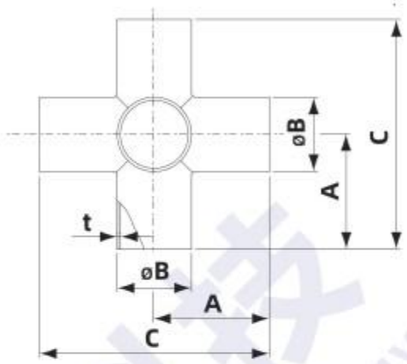

Model No.	Material	A	B	C	t	Parts No.
16FXA	304 S.S.	34.5	19.05	69	1.65	16260020024
25FXA	304 S.S.	47.6	25.4	95.2	1.65	16260030034
40FXA	304 S.S.	57.2	38.1	114.3	1.65	16260050054
50FXA	304 S.S.	76.2	50.8	152.4	1.65	16260060064
63FXA	304 S.S.	76.2	63.5	152.4	1.65	16260070074
80FXA	304 S.S.	82.5	76.2	165.1	1.65	16260080084
100FXA	304 S.S.	98.4	101.6	196.8	2	16260090094
150FXA	304 S.S.	127	152.4	254	2.7	16260110114

Six-Way Crosses

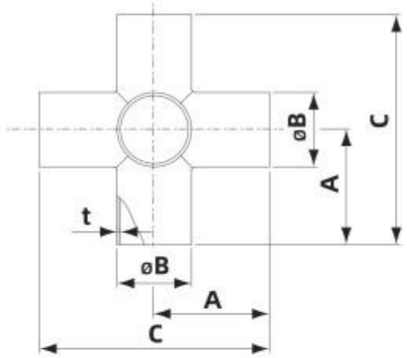

Model No.	Material	A	B	C	t	Parts No.
16SXA	304 S.S.	34.5	19.05	69	1.65	16280020024
25SXA	304 S.S.	47.6	25.4	95.2	1.65	16280030034
40SXA	304 S.S.	57.2	38.1	114.3	1.65	16280050054
50SXA	304 S.S.	76.2	50.8	152.4	1.65	16280060064
63SXA	304 S.S.	76.2	63.5	152.4	1.65	16280070074
80SXA	304 S.S.	82.5	76.2	165.1	1.65	16280080084
100SXA	304 S.S.	98.4	101.6	196.8	2	16280090094
150SXA	304 S.S.	127	152.4	254	2.7	16280110114

Dimension in mm unless otherwise noted

All information contained herein was current at time of publication, we reserve the right to change the design/specification for products improvement without notice.

05 ADAPTOR SERIES

General Information	5-2
Explanation of ISO Pipe Thread	5-4
Thread Symbol List	5-6
ANSI-KF Tubulated Adaptor	5-9
ANSI-KF Tubulated Adaptor with O'Ring Groove	5-9
CF-ISO Tubulated Adaptor	5-10
CF-KF Tubulated Adaptor	5-10
ISO-KF Tubulated Adaptor	5-11
CF Reducing Adaptor-Fixed	5-12
CF Reducing Adaptor-Small Flange Rotatable	5-12
KF-VCR Male Adaptor	5-13
KF-VCR Female Adaptor	5-13
KF-Swagelok Adaptor	5-14
KF-Rubber Hose Adaptor	5-14
KF-Male Pipe Adaptor	5-15
KF-Female Pipe Adaptor	5-16
KF-Quick-Disconnect Adaptor	5-17
KF-KF Conical Reducing Adaptor	5-17
ISO-K F Conical Reducing Adaptor	5-18
ISO-IS O Conical Reducing Adaptor	5-18

General Information

Features

- Adaptor flanges mate one type of flange system to another. They are available for all major systems, such as ConFlat-compatible(CF), KF, ISO and ANSI. Unless stated otherwise, all adaptors are stainless steel.
- Most flange systems have been adapted to the ANSI flanges. This catalog lists only the most popular, but we can provide almost unlimited variations and modifications to suit individual requirements.

Specifications

- Flange : 304 S.S. (Other material available upon request)
- Tube or Pipe : 304 S.S. (Other material available upon request)
- Adaptor : 304 S.S.(Other material available upon request)
- Larger or special size available upon request

Applications

- Connection exchange.
- Piping size variations and modifications to suit individual requirement.
- KF female pipe adaptors are used to insert a PT (NPT) threaded pressure gauge or up-to-air valve into a foreline. Often a KF tee is inserted into the foreline joint and the third port closed with an adaptor.
- KF male pipe adaptors are flanged stubs that terminate in threads ranging from 1/8" to 1". Use Teflon tape for sealing threaded joint.

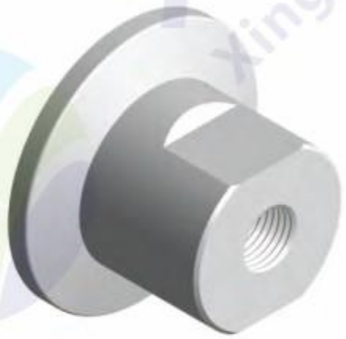

All information contained herein was current at time of publication, we reserve the right to change the design/specification for products improvement without notice.

- KF rubber hose adaptors are made from stainless steel with a flange at one end and a rubber tubing adaptor at the other. The tubing adaptor is compatible with standard hose bores.

- KF quick-disconnect adaptor mates a KF flange with an O'ring quick coupling. The quick couplings make a vacuum joint with any smooth-surfaced standard O.D. tube. Their most common application is attaching tubulated ion or thermocouple gauges to a system.

- Swagelok fittings provide a torque-free seal at all tubing connections and eliminate hazardous leaks in instrumentation and process tubing.

- VCR adaptors are used to connect a male or female VCR component to an existing flange system. VCR's seal by the compression of a gasket (usually copper) between two highly polished beads on the surfaces of the VCR connectors.

Dimension in mm unless otherwise noted
All information contained herein was current at time of publication, we reserve the right to change the design/specification for products improvement without notice.

兴生机械科技
XingSheng Machinery Technology

05 ADAPTOR SERIES

Explanation of ISO Pipe Thread

- The ISO 228/1 and 7/1 threads were created by the International Standard Organization to standardize the nomenclature of several international pipe threads. The 228/1 is parallel thread system where a pressure tight seal is not made on the thread. With the 228/1, the seal is usually made metal-to-metal against the female port or with a gasket.

- The 7/1 is a tapered system where a pressure tight seal is made on the thread.

- The 7/1 looks similar to the NPT thread, except the 7/1 has a 55° inclined angle on the threads. Also, number of threads per inch varies slightly.

Pipe Thread Symbol

Type	Symbol	Specification
Taper Thread	R (male)	
	Rc (female)	JIS B 0203 (PT), DIN 2999, ISO 7/1, BS21 (BSPT)
	N	ANSI/ASME B1.20.1 (NPT)
Parallel Thread	G	JIS B0202 (PF), ISO 228/1, BS2779 (BSPP), DIN 3852 part 2
	U	American Standard Unified Screw Thread

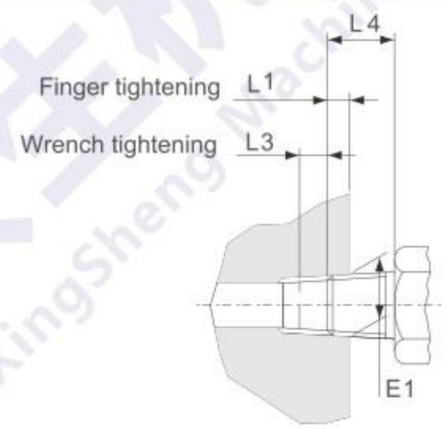

NPT Thread size	Thread per inch	E1 mm	L1 Nominal mm	L3 nominal		L4 mm
				threads	mm	
1/8	27	9.50	4.10	3	2.82	9.97
1/4	18	12.50	5.79	3	4.23	15.10
3/8	18	15.93	6.10	3	4.23	15.26
1/2	14	19.77	8.13	3	5.44	19.86
3/4	14	25.12	8.61	3	5.44	20.15
1	11-1/2	31.46	10.16	3	6.63	25.01
1-1/4	11-1/2	40.22	10.67	3	6.63	25.62
1-1/2	11-1/2	46.29	10.67	3	6.63	26.04

Dimension in mm unless otherwise noted
All information contained herein was current at time of publication, we reserve the right to change the design/specification for products improvement without notice.

Explanation of ISO Pipe Thread

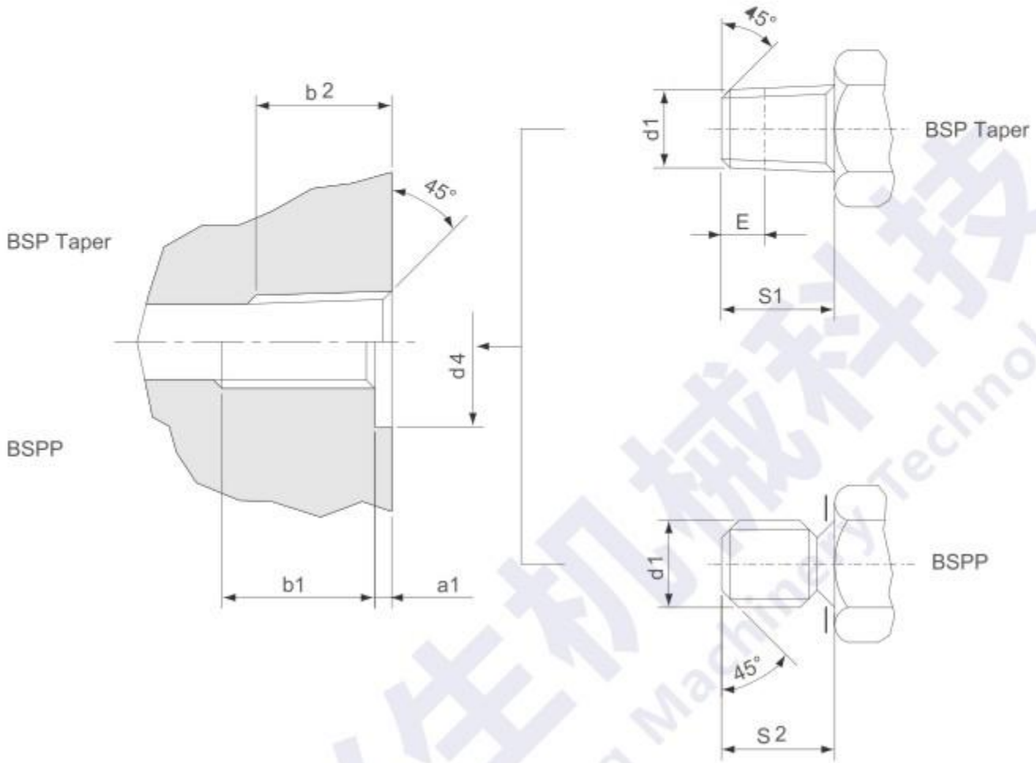

BSPP	BSPT	Threads Per Inch	d1 nominal mm	E min mm	d4 max mm	a1 mm	S1 mm	S2 min mm	b1 min mm	b2 mm
1/8	1/8	28	9.73	3.97	15	1	9.53	7.14	8	5.5
1/4	1/4	19	13.16	6.05	19	1.5	14.28	9.40	12	8.5
3/8	3/8	19	16.66	6.35	23	2	14.28	9.40	12	8.5
1/2	1/2	14	20.95	8.16	27	2.5	19.05	14.28	14	10.5
3/4	3/4	14	26.44	9.2	33	2.5	19.05	15.88	16	13
1	1	11	33.25	10.39	40	2.5	23.80	18.24	18	
1-1/4	1-1/4	11	41.91	12.7	50	2.5	24	19.84	20	
1-1/2	1-1/2	11	47.80	12.7	56	2.5	25.4	22.23	22	

Dimension in mm unless otherwise noted

All information contained herein was current at time of publication, we reserve the right to change the design/specification for products improvement without notice.

兴生机械科技 XingSheng Machinery Technology

05 ADAPTOR SERIES

Thread Symbol List

Country	Symbol	Description	Code No.
Japan	M	Metric screw threads	JIS B 0205, 0207
	S	Miniature threads	JIS B 0201
	UNC	Unified coarse threads	JIS B 0206
	UNF	Unified fine threads	JIS B 0208
	Tr	Metric trapezoidal threads	JIS B 0216
	TW	29°trapezoidal threads	JIS B 0222
	R	Male taper pipe threads	JIS B 0203
	Rc	Female taper pipe threads	JIS B 0203
	Rp	Male taper pipe threads for female straight pipe threads	JIS B 0203
	G	Straight pipe threads	JIS B 0202
	PF	Straight pipe threads not include in ISO	JIS B 0202
	PT	Taper pipe threads not include in ISO	JIS B 0203
	PS	Taper pipe threads not include in ISO	JIS B 0203
	CTC	Thin wall cable pipe threads	JIS B 0204
	CTG	Thick wall cable pipe threads	JIS B 0204
	BC	Threads for automobile	JIS B 0225
	SM	Threads for sewing machine	JIS B 0226
	E	Threads for bulb	JIS C 7709
	TV	Tire valve threads for automobile	JIS D 4207
	CTV	Tire valve threads for bicycle	JIS D 9422
ISO	M	Metric screw threads	ISO 261
	S	ISO miniature threads	ISO R 1501
	Tr	ISO metric trapezoidal threads	ISO 2902
	UNC	ISO inch coarse threads	ISO 263
	UNF	ISO inch fine threads	ISO 263
	UNEF	ISO inch extra-fine threads	ISO 263
	UN	ISO inch threads (constant pitch series)	ISO 263
	UNJC	Inch series UNJ threads for aircraft & aerospace (coarse threads)	ISO 3161
	UNJF	Inch series UNJ threads for aircraft & aerospace (fine threads)	ISO 3161
	UNJEF	Inch series UNJ threads for aircraft & aerospace (extra-fine threads)	ISO 3161
	UNJ	Inch series UNJ threads for aircraft & aerospace (constant pitch series)	ISO 3161
	MJ	Metric threads for aircraft & aerospace	ISO 5855
	R	Male taper pipe threads	ISO 7/1
	Rc	Female taper pipe threads	ISO 7/1
	Rp	Male taper pipe threads for female straight pipe threads	ISO 7/1
	G	Straight pipe threads	ISO 228/1
	GL	Threads for glass containers	ISO R 1115
	V	Tire valve threads	ISO 4570/1～3

Dimension in mm unless otherwise noted

All information contained herein was current at time of publication, we reserve the right to change the design/specification for products improvement without notice.

Thread Symbol List

Country	Symbol	Description	Code No.
USA	UN	Unified inch screw threads	ANSI B 1.1
	UNC/UNRC	Unified coarse thread series	ANSI B 1.1
	UNF/UNRF	Unified fine thread series	ANSI B 1.1
	UNEF/UNREF	Unified extra-fine thread series	ANSI B 1.1
	4UN/4UNR	Unified constant-pitch series with 4-threads	ANSI B 1.1
	6UN/6UNR	Unified constant-pitch series with 6-threads	ANSI B 1.1
	8UN/8UNR	Unified constant-pitch series with 8-threads	ANSI B 1.1
	12UN/12UNR	Unified constant-pitch series with 12-threads	ANSI B 1.1
	16UN/16UNR	Unified constant-pitch series with 16-threads	ANSI B 1.1
	20UN/20UNR	Unified constant-pitch series with 20-threads	ANSI B 1.1
	28UN/28UNR	Unified constant-pitch series with 28-threads	ANSI B 1.1
	32UN/32UNR	Unified constant-pitch series with 32-threads	ANSI B 1.1
	UN/UNRS	Unified threads of special diameters, pitches and lengths of engagement	ANSI B 1.1
	NR	American National thread with a 0.108p to 0.144p controlled root radius	MIL-B-7838
	Acme	Acme screw threads	ANSI B 1.5
	Stub -Acme	Stub Acme screw threads	ANSI B 1.8
	Butt	Buttress inch screw threads	ANSI B 1.9
	UNM	Unified miniature thread series	ANSI B 1.10
	NC5	Class 5 interference-fit thread	ANSI B 1.12
	NPT	American Standard taper pipe threads for general use	ANSI/ASME B 1.20.1
	NPTR	American Standard taper pipe threads for railing joint	ANSI/ASME B 1.20.1
	NPSC	American Standard straight pipe threads in pipe couplings	ANSI/ASME B 1.20.1
	NPSL	American Standard straight pipe threads for loose-fitting mechanical joint with locknut	ANSI/ASME B 1.20.1
	NPSM	American Standard straight pipe threads for free-fitting mechanical joint for fixtures	ANSI/ASME B 1.20.1
	NPSH	American Standard straight pipe threads for loose-fitting mechanical joint for hose coupling	ANSI/ASME B 1.20.1
	NPTF	Dryseal American Standard taper pipe threads	ANSI B 1.20.3,1.20.4
	F-PTF	Dryseal fine taper pipe thread series	ANSI B 1.20.3,1.20.4
	PTF -SAE SHORT	Dryseal SAE short taper threads	ANSI B 1.20.3,1.20.4
	PTF -SPL SHORT	Dryseal special short taper pipe threads	ANSI B 1.20.3,1.20.4
	PTF -SPL EXTRA SHORT	Dryseal special extra short taper pipe threads	ANSI B 1.20.3,1.20.4
	SPL -PTF	Dryseal special taper pipe threads	ANSI B 1.20.3,1.20.4
	NPSI	Dryseal American Standard intermediate internal Straight pipe threads	ANSI B 1.20.3,1.20.4

Dimension in mm unless otherwise noted

All information contained herein was current at time of publication, we reserve the right to change the design/specification for products improvement without notice.

兴生机械科技
XingSheng Machinery Technology

05 ADAPTOR SERIES

Thread Symbol List

Country	Symbol	Description	Code No.
USA	NPSF	Dryseal American Standard fuel internal straight pipe threads	ANSI B 1.20.3,1.20.4
	ANPT	Aeronautical National Form taper pipe threads	MIL-P-7105
	NGO	National gas outlet threads	ANSI B 57.1
	NGS	National gas straight threads	ANSI B 57.1
	NGT	National gas taper threads	ANSI B 57.1
	SGT	Special gas taper threads	ANSI B 57.1
	NH	Hose coupling and firehose coupling threads	USAS B 2.4
	NHR	Hose coupling and firehose coupling threads	USAS B 2.4
	NPSH	Hose coupling and firehose coupling threads	USAS B 2.4
	AMO	American Standard microscope objective threads	ANSI B 1.11
British	UNS	Unified special series	BS 1580
	B.S.W.	British Standard Whitworth coarse threads	BS 84
	BSF	British Standard fine threads	BS 84
	BSP	British Standard pipe threads	BS 21, 2779
	B. A.	B. A.- Screw threads	BS 93, 1929
	Acme	General purpose, Acme screw threads	BS 1104
	But-tress	Buttress threads	BS 1657
	BSC	Cycle threads	BS 811
	BSMO	Microscope objective threads	BS 3569
	E	Edison screw threads	BS 5042
	R. S. M.	Rolled sheet metal screw threads and threads for molded plastics and die-cast materials	BS 2038
Germany	GL	Glass containers thread	DIN 168
	S	Buttress thread	DIN 513, 2781, 20401
	Rd	Knuckle thread	DIN 405, 262, 264, 3182, 7273, 15403, 20400
	W	Whitworth-gewinde	DIN 168, 477, 6630, 4668, 49301
	KS, KT	Screw seal for packages made of plastics	DIN 6063
	E	Edison screw thread	DIN 40400
	Pg	Steel conduit thread	DIN 40430
	Glasg	Thread for cover glasses, porcelain and cast iron caps	DIN 40450
	Vg	Automobile tire valve thread	DIN 7756
	Gf	Thread for freezing pipes	DIN 4930
	Gg	Thread for drill pipes	DIN 4941, 20314
	HA	Thread for bone screws and nuts	DIN 58810
	RMS	Thread connection for microscope objectives	DIN 58888
	FG	Bicycle threads	DIN 79012

Dimension in mm unless otherwise noted

All information contained herein was current at time of publication, we reserve the right to change the design/specification for products improvement without notice.

ANSI-KF Tubulated Adaptor

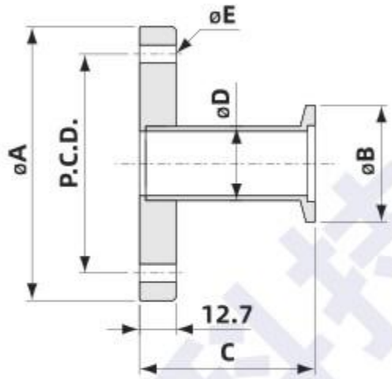

Model No.	Material	A	B	C	D	E*No.	Nominal	P.C.D	Parts No.
ASA4KA40	304 S.S.	108	55	42	38.1	15.8*4	1	79.4	17110301092
ASA4KA50	304 S.S.	108	75	42	50.8	15.8*4	1	79.4	17110301122
ASA5KA40	304 S.S.	127	55	42	38.1	15.8*4	1-1/2	98.4	17110501092
ASA5KA50	304 S.S.	127	75	42	50.8	15.8*4	1-1/2	98.4	17110501122
ASA7KA40	304 S.S.	190.5	55	42	38.1	19*4	3	152.4	17110801092
ASA7KA50	304 S.S.	190.5	75	42	50.8	19*4	3	152.4	17110801122

ANSI-KF Tubulated Adaptor with O'Ring Groove

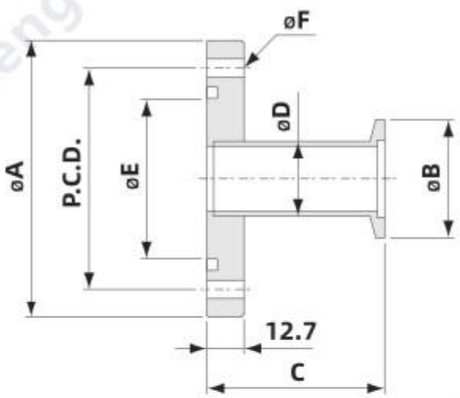

Model No.	Material	A	B	C	D	E	F*No.	Nominal	P.C.D	Parts No.
ASA4OGKA40	304 S.S.	108	55	42	38.1	47.5	15.8*4	1	79.4	17120301092
ASA4OGKA50	304 S.S.	108	75	42	50.8	47.5	15.8*4	1	79.4	17120301122
ASA5OGKA40	304 S.S.	127	55	42	38.1	63.5	15.8*4	1-1/2	98.4	17120501092
ASA5OGKA50	304 S.S.	127	75	42	50.8	63.5	15.8*4	1-1/2	98.4	17120501122
ASA7OGKA40	304 S.S.	190.5	55	42	38.1	117.5	19*4	3	152.4	17120801092
ASA7OGKA50	304 S.S.	190.5	75	42	50.8	117.5	19*4	3	152.4	17120801122

Dimension in mm unless otherwise noted

All information contained herein was current at time of publication, we reserve the right to change the design/specification for products improvement without notice.

兴生机械科技
XingSheng Machinery Technology

05 ADAPTOR SERIES

CF-ISO Tubulated Adaptor

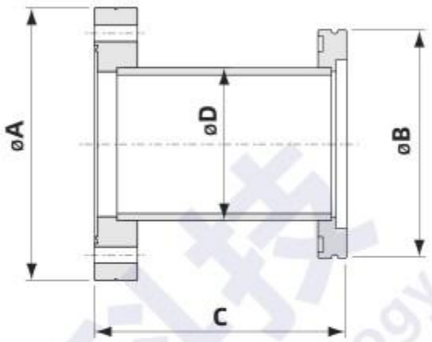

Model No.	Material	A	B	C	D	Parts No.
CF63S63A	304 S.S.	113.6	95	90	63.5	17080702132
CF100S63A	304 S.S.	151.6	95	90	63.5	17080902132
CF100S100A	304 S.S.	151.6	130	90	101.6	17080902152
ISO160C100A	304 S.S.	151.6	180	90	101.6	17021208152
CF150S63A	304 S.S.	202.5	95	90	63.5	17081102132
CF150S100A	304 S.S.	202.5	130	90	101.6	17081102152
ISO160C150A	304 S.S.	202.5	180	90	152.4	17021208172

CF-KF Tubulated Adaptor

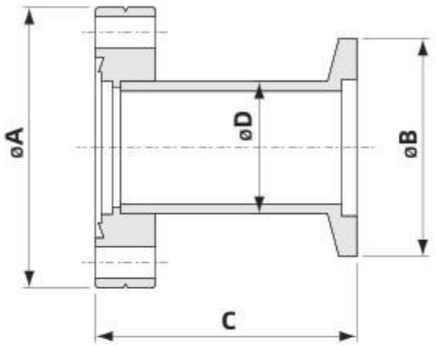

Mod el No.	Material	A	B	C	D	Parts No.
CF16K10A	304 S.S.	33.8	30	43	12.7	17080201032
CF16K16A	304 S.S.	33.8	30	43	19.05	17080201052
CF35K10A	304 S.S.	69.5	30	45.3	12.7	17080401032
CF35K16A	304 S.S.	69.5	30	45.3	19.05	17080401052
CF35K25A	304 S.S.	69.5	40	45.3	25.4	17080401072
CF35K40A	304 S.S.	69.5	55	45.3	38.1	17080401092
CF63K50A	304 S.S.	113.6	75	49.5	50.8	17080701122

Dimension in mm unless otherwise noted

All information contained herein was current at time of publication, we reserve the right to change the design/specification for products improvement without notice.

ISO-KF Tubulated Adaptor

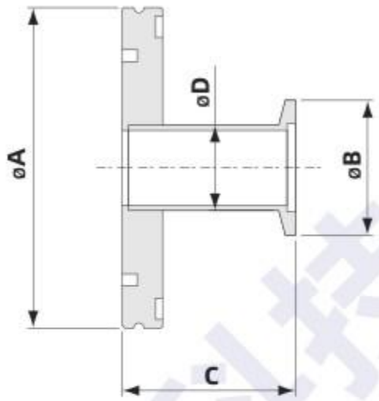

Model No.	Material	A	B	C	D	Parts No.
ISO63KA25	304 S.S.	95	40	42	25.4	17020701072
ISO63KA40	304 S.S.	95	55	42	38.1	17020701092
ISO63KA50	304 S.S.	95	75	42	50.8	17020701122
ISO80KA40	304 S.S.	110	55	42	38.1	17020801092
ISO80KA50	304 S.S.	110	75	42	50.8	17020801122
ISO100KA40	304 S.S.	130	55	42	38.1	17020901092
ISO100KA50	304 S.S.	130	75	42	50.8	17020901122

Dimension in mm unless otherwise noted

All information contained herein was current at time of publication, we reserve the right to change the design/specification for products improvement without notice.

兴生机械科技
XingSheng Machinery Technology

05 ADAPTOR SERIES

CF Reducing Adaptor-Fixed

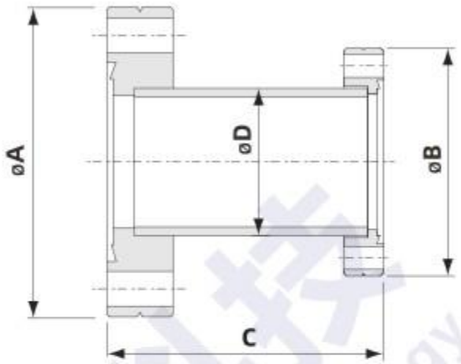

Model No.	Material	A	B	C	D	Parts No.
CF35RA16	304 S.S.	69.5	33.8	76.2	19.05	17080408052
CF63RA16	304 S.S.	113.6	33.8	76.2	19.05	17080708052
CF63RA35	304 S.S.	113.6	69.5	76.2	38.1	17080708082
CF100RA35	304 S.S.	151.6	69.5	76.2	38.1	17080908082
CF100RA63	304 S.S.	151.6	113.6	76.2	63.5	17080908132
CF150RA35	304 S.S.	202.5	69.5	76.2	38.1	17081108082
CF150RA63	304 S.S.	202.5	113.6	76.2	63.5	17081108132
CF150RA100	304 S.S.	202.5	151.6	76.2	101.6	17081108152

CF Reducing Adaptor-Small Flange Rotatable

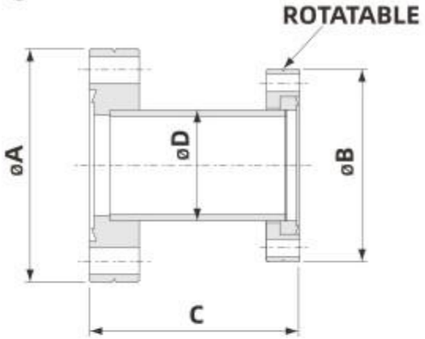

Model No.	Material	A	B	C	D	Parts No.
CF35RA16R	304 S.S.	69.5	33.8	76.2	19.05	17080406052
CF63RA16R	304 S.S.	113.6	33.8	76.2	19.05	17080706052
CF63RA35R	304 S.S.	113.6	69.5	76.2	38.1	17080706082
CF100RA35R	304 S.S.	151.6	69.5	76.2	38.1	17080906082
CF100RA63R	304 S.S.	151.6	113.6	76.2	63.5	17080906132
CF150RA35R	304 S.S.	202.5	69.5	76.2	38.1	17081106082
CF150RA63R	304 S.S.	202.5	113.6	76.2	63.5	17081106132
CF150RA100R	304 S.S.	202.5	151.6	76.2	101.6	17081106152

Dimension in mm unless otherwise noted

All information contained herein was current at time of publication, we reserve the right to change the design/specification for products improvement without notice.

KF-VCR Male Adaptor

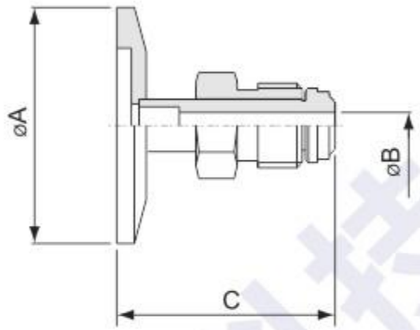

Model No.	Material	A	B	C	VCR	Parts No.
KF16MVCR6	304 S.S.	30	4.4	37	1/4"	17010216012
KF16MVCR13	304 S.S.	30	10.4	41.9	1/2"	17010216032
KF25MVCR6	304 S.S.	40	4.4	37	1/4"	17010316012
KF25MVCR13	304 S.S.	40	10.4	41.9	1/2"	17010316032
KF40MVCR6	304 S.S.	55	4.4	37	1/4"	17010516012
KF40MVCR13	304 S.S.	55	10.4	41.9	1/2"	17010516032
KF50MVCR6	304 S.S.	75	4.4	37	1/4"	17010616012
KF50MVCR13	304 S.S.	75	10.4	41.9	1/2"	17010616032

KF-VCR Female Adaptor

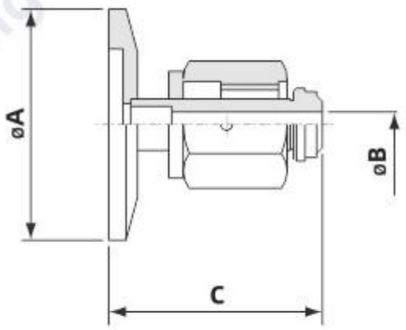

Model No.	Material	A	B	C	VCR	Parts No.
KF16FVCR6	304 S.S.	30	4.4	37	1/4"	17010217012
KF16FVCR13	304 S.S.	30	10.4	41.9	1/2"	17010217032
KF25FVCR6	304 S.S.	40	4.4	37	1/4"	17010317012
KF25FVCR13	304 S.S.	40	10.4	41.9	1/2"	17010317032
KF40FVCR6	304 S.S.	55	4.4	37	1/4"	17010517012
KF40FVCR13	304 S.S.	55	10.4	41.9	1/2"	17010517032
KF50FVCR6	304 S.S.	75	4.4	37	1/4"	17010617012
KF50FVCR13	304 S.S.	75	10.4	41.9	1/2"	17010617032

Dimension in mm unless otherwise noted

All information contained herein was current at time of publication, we reserve the right to change the design/specification for products improvement without notice.

兴生机械科技
XingSheng Machinery Technology

05 ADAPTOR SERIES

KF-Swagelok Adaptor

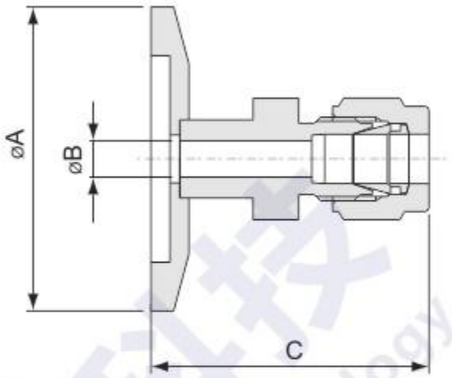

Model No.	Material	A	B	C	Swagelok	Parts No.
KF16SWA6	304 S.S.	30	4.8	36.6	1/4"	17010219012
KF16SWA13	304 S.S.	30	10.8	45	1/2"	17010219032
KF25SWA6	304 S.S.	40	4.8	36.6	1/4"	17010319012
KF25SWA13	304 S.S.	40	10.8	54.3	1/2"	17010319032
KF40SWA6	304 S.S.	55	4.8	36.6	1/4"	17010519012
KF40SWA13	304 S.S.	55	10.8	54.3	1/2"	17010519032
KF50SWA6	304 S.S.	75	4.8	36.6	1/4"	17010619012
KF50SWA13	304 S.S.	75	10.8	54.3	1/2"	17010619032

KF-Rubber Hose Adaptor

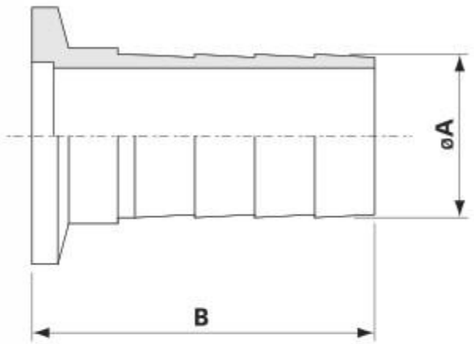

Model No.	Material	A	B	Hose Size	Parts No.
KF10RHA16	304 S.S.	16	40	5/8"	17010118042
KF16RHA19	304 S.S.	19.1	40	3/4"	17010218052
KF25RHA22	304 S.S.	22.2	40	7/8"	17010318062
KF40RHA41	304 S.S.	41.3	40	1-5/8"	17010518102
KF50RHA48	304 S.S.	47.7	40	1-7/8"	17010618112

Dimension in mm unless otherwise noted

All information contained herein was current at time of publication, we reserve the right to change the design/specification for products improvement without notice.

KF-Male Pipe Adaptor

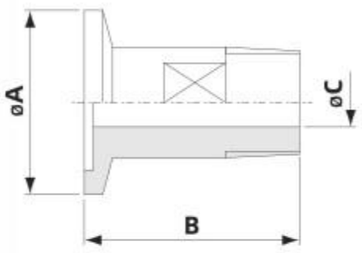

Thread Type: PT

Model No.	Material	A	B	C	D	Tread	Parts No.
KF16MPT3	304 S.S.	30	35	4.7	10	1/8"PT	17010212002
KF16MPT6	304 S.S.	30	35	7.1	14	1/4"PT	17010212012
KF25MPT3	304 S.S.	40	35	4.7	10	1/8"PT	17010312002
KF25MPT6	304 S.S.	40	35	7.1	14	1/4"PT	17010312012
KF25MPT13	304 S.S.	40	40	11.9	22	1/2"PT	17010312032
KF25MPT19	304 S.S.	40	40	15.9	27	3/4"PT	17010312052
KF40MPT6	304 S.S.	55	35	7.1	14	1/4"PT	17010512012
KF40MPT13	304 S.S.	55	40	11.9	22	1/2"PT	17010512032
KF40MPT19	304 S.S.	55	40	15.9	27	3/4"PT	17010512052
KF40MPT25	304 S.S.	55	45	22.2	36	1"PT	17010512072
KF50MPT6	304 S.S.	75	35	7.1	14	1/4"PT	17010612012
KF50MPT13	304 S.S.	75	40	11.9	22	1/2"PT	17010612032
KF50MPT19	304 S.S.	75	40	15.9	27	3/4"PT	17010612052
KF50MPT25	304 S.S.	75	45	22.2	36	1"PT	17010612072

Thread Type: NPT

Model No.	Material	A	B	C	D	Tread	Parts No.
KF16MNPT3	304 S.S.	30	35	4.7	10	1/8"NPT	17010214002
KF16MNPT6	304 S.S.	30	35	7.1	14	1/4"NPT	17010214012
KF25MNPT3	304 S.S.	40	35	4.7	10	1/8"NPT	17010314002
KF25MNPT6	304 S.S.	40	35	7.1	14	1/4"NPT	17010314012
KF25MNPT13	304 S.S.	40	40	11.9	22	1/2"NPT	17010314032
KF25MNPT19	304 S.S.	40	40	15.9	27	3/4"NPT	17010314052
KF40MNPT6	304 S.S.	55	35	7.1	14	1/4"NPT	17010514012
KF40MNPT13	304 S.S.	55	40	11.9	22	1/2"NPT	17010514032
KF40MNPT19	304 S.S.	55	40	15.9	27	3/4"NPT	17010514052
KF40MNPT25	304 S.S.	55	45	22.2	36	1"NPT	17010514072
KF50MNPT6	304 S.S.	75	35	7.1	14	1/4"NPT	17010614012
KF50MNPT13	304 S.S.	75	40	11.9	22	1/2"NPT	17010614032
KF50MNPT19	304 S.S.	75	40	15.9	27	3/4"NPT	17010614052
KF50MNPT25	304 S.S.	75	45	22.2	36	1"NPT	17010614072

Dimension in mm unless otherwise noted

All information contained herein was current at time of publication, we reserve the right to change the design/specification for products improvement without notice.

兴生机械科技
XingSheng Machinery Technology

05 ADAPTOR SERIES

KF- Female Pipe Adaptor

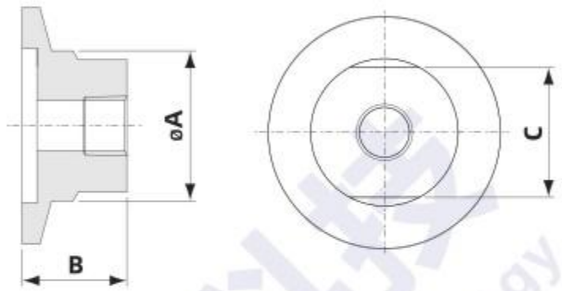

Thread Type: PT

Model No.	Material	A	B	C	Tread	Parts No.
KF16FPT3	304 S.S.	19.05	25	17	1/8"PT	17010213002
KF25FPT3	304 S.S.	25.4	25	19	1/8"PT	17010313002
KF40FPT3	304 S.S.	38.1	25	32	1/8"PT	17010513002
KF50FPT3	304 S.S.	50.8	25	46	1/8"PT	17010613002
KF16FPT6	304 S.S.	19.05	25	17	1/4"PT	17010213012
KF25FPT6	304 S.S.	25.4	25	19	1/4"PT	17010313012
KF40FPT6	304 S.S.	38.1	25	32	1/4"PT	17010513012
KF50FPT6	304 S.S.	50.8	25	46	1/4"PT	17010613012

Thread Type: NPT

Model No.	Material	A	B	C	Tread	Parts No.
KF16FNPT3	304 S.S.	19.05	25	17	1/8"NPT	17010215002
KF25FNPT3	304 S.S.	25.4	25	19	1/8"NPT	17010315002
KF40FNPT3	304 S.S.	38.1	25	32	1/8"NPT	17010515002
KF50FNPT3	304 S.S.	50.8	25	46	1/8"NPT	17010615002
KF16FNPT6	304 S.S.	19.05	25	17	1/4"NPT	17010215012
KF25FNPT6	304 S.S.	25.4	25	19	1/4"NPT	17010315012
KF40FNPT6	304 S.S.	38.1	25	32	1/4"NPT	17010515012
KF50FNPT6	304 S.S.	50.8	25	46	1/4"NPT	17010615012

Dimension in mm unless otherwise noted

All information contained herein was current at time of publication, we reserve the right to change the design/specification for products improvement without notice.

KF-Quick Disconnect Adaptor

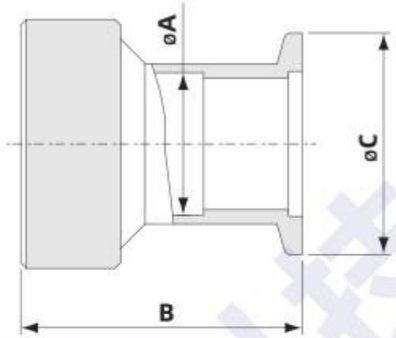

Model No.	Material	A	B	C	Tube Size	Parts No.
KF16QDA6	304 S.S.	6.5	33.4	30	1/4"	17010220012
KF16QDA13	304 S.S.	13	36.5	30	1/2"	17010220032
KF16QDA19	304 S.S.	19.3	44.5	30	3/4"	17010220052
KF25QDA13	304 S.S.	13	36.5	40	1/2"	17010320032
KF25QDA19	304 S.S.	19.3	44.5	40	3/4"	17010320052
KF25QDA25	304 S.S.	25.7	50.8	40	1"	17010320072
KF40QDA13	304 S.S.	13	36.5	55	1/2"	17010520032
KF40QDA19	304 S.S.	19.3	44.5	55	3/4"	17010520052
KF40QDA25	304 S.S.	25.7	50.8	55	1"	17010520072
KF40QDA38	304 S.S.	38.4	60.3	55	1-1/2"	17010520092
KF50QDA38	304 S.S.	38.4	60.3	75	1-1/2"	17010620092
KF50QDA50	304 S.S.	51	63.5	75	2"	17010620122

KF-KF Conical Reducing Adaptor

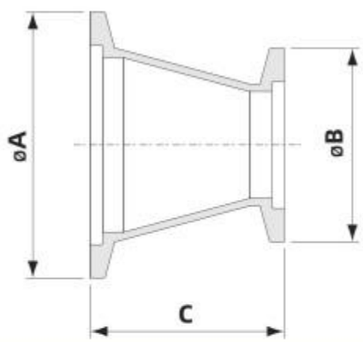

Model No.	Material	A	B	C	Parts No.
KF25RA16	304 S.S.	40	30	40	17210301052
KF40RA16	304 S.S.	55	30	40	17210501052
KF40RA25	304 S.S.	55	40	40	17210501072
KF50RA16	304 S.S.	75	30	40	17210601052
KF50RA25	304 S.S.	75	40	40	17210601072
KF50RA40	304 S.S.	75	55	40	17210601092

Dimension in mm unless otherwise noted

All information contained herein was current at time of publication, we reserve the right to change the design/specification for products improvement without notice.

兴生机械科技
XingSheng Machinery Technology

05 ADAPTOR SERIES

ISO-KF Conical Reducing Adaptor

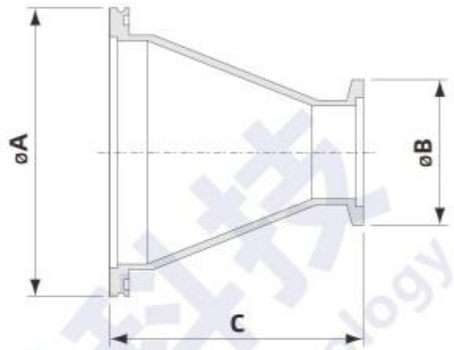

Model No.	Material	A	B	C	Parts No.
ISO80KRA40	304 S.S.	110	55	63	17220801092
ISO100KRA40	304 S.S.	130	55	63	17220901092
ISO80KRA50	304 S.S.	110	75	63	17220801122
ISO100KRA50	304 S.S.	130	75	63	17220901122

ISO-ISO Conical Reducing Adaptor

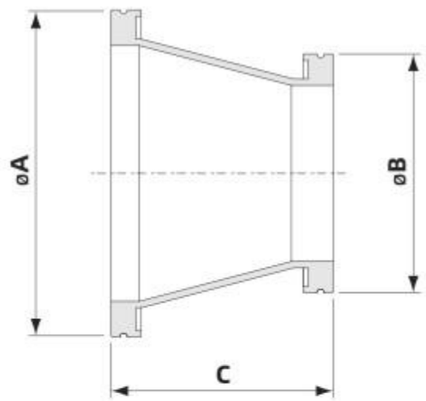

Model No.	Material	A	B	C	Parts No.
ISO80RA63	304 S.S.	110	95	63	17220802132
ISO100RA63	304 S.S.	130	95	63	17220902132
ISO100RA80	304 S.S.	130	110	63	17220902142
ISO160RA63	304 S.S.	180	95	63	17221202132

Dimension in mm unless otherwise noted

All information contained herein was current at time of publication, we reserve the right to change the design/specification for products improvement without notice.

06 VACUUM VALVE

General Information 6-5
Ordering Information 6-7

Vacuum Poppet Valves

Angle Valve 6-11
Manual 6-11
Pneumatic 6-16
Large Angle Valve 6-26
Manual 6-26,29
Pneumatic 6-27,30
Y-Inline Valve 6-31
Manual 6-31
Pneumatic 6-33
Z-Inline Valve 6-35
Manual 6-35
Pneumatic 6-38
Formed Bellows seal stainless Valve 6-41
Angle Valve 6-41
Y-Inline Valve 6-41
Two-Stage Valve 6-42
Aluminum Block Valves 6-43
All-in-one angle valve-Pneumatic 6-45
Aluminum angle valve-Pneumatic 6-46
Aluminum angle valve-Manual 6-51

Butterfly Valves

Pneumatic 6-53
3-Position 6-57
APC 6-60
Manual 6-64

Ball Valves

Pneumatic 6-68
Motor Drive 6-68
Manual 6-69

Check Valves

Check Valve 6-70

Vent Valves

Vent Valve 6-71

Bakeable All-metal Valves

Angle valve 6-72
Straight through valve 6-72

Teflon Coating Valves

Angle valve-Pneumatic 6-74
Y-Inline valve-Pneumatic 6-75
Angle valve-Manual 6-76

Accessories

Heating Jacket 6-77
Valve Kit 6-78

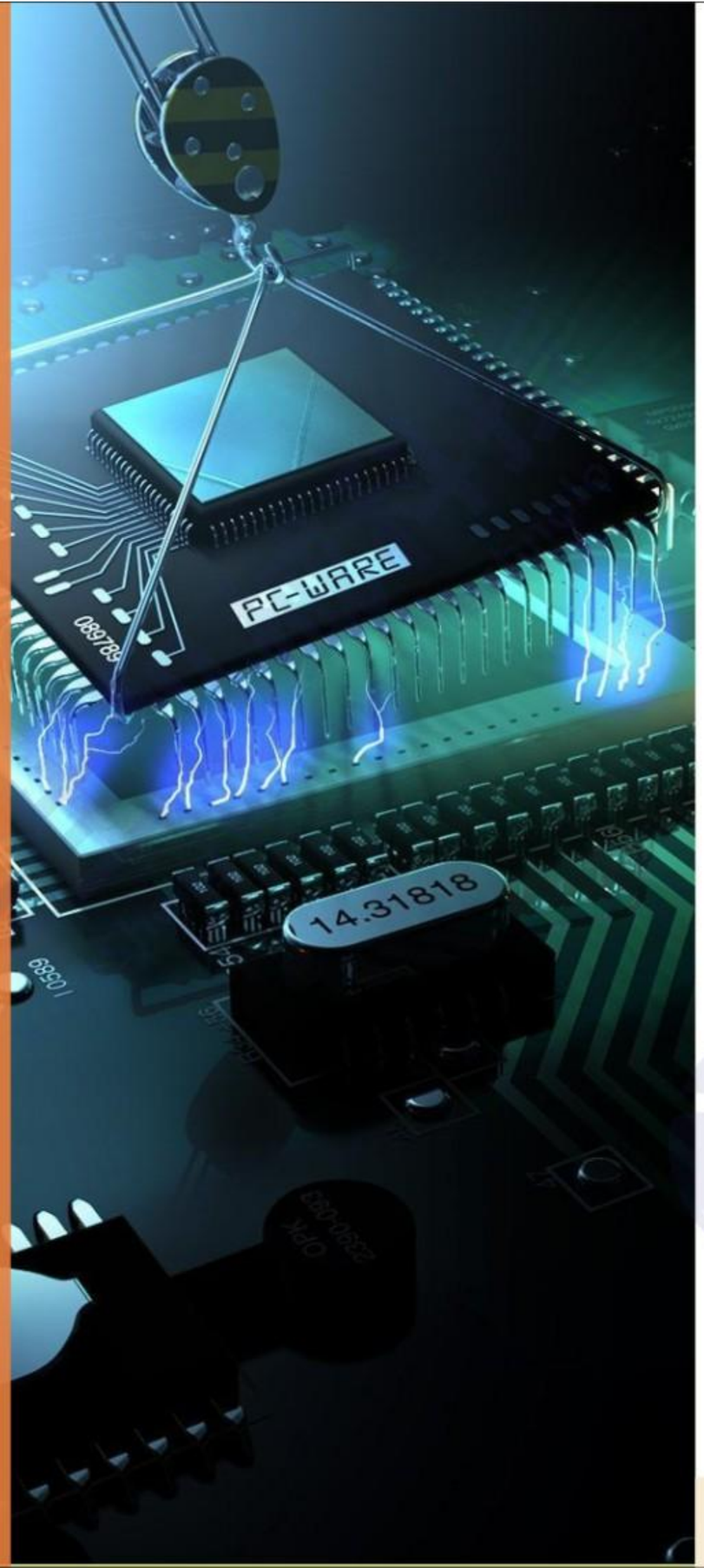

VACUUM POPPET VALVES

Angle valve Bellows | Angle valve O-ring | Large angle valve Bellows | Large angle valve O-ring | Y-inline valve Bellows | Y-inline valve O-ring

VACUUM POPPET VALVES / ALUMINUM BLOCK VALVES

Z-inline valve Bellows | Z-inline valve O-ring | Fomed bellows seal stainless valve Bellows | Pneumatic All-in-one angle valve Bellows | Pneumatic aluminum angle valve Bellows | Pneumatic aluminum angle valve O-ring

BUTTERFLY VALVES

Manual aluminum angle valve Bellows | Manual aluminum angle valve O-ring | LV Manual butterfly valve O-ring | HV Manual butterfly valve O-ring | Pneumatic butterfly valve O-ring | 3-Position butterfly valve O-ring

BALL VALVES / CHECK VALVES / VENT VALVES

APC butterfly valve O-ring | Manual ball valve Teflon-ring | Pneumatic ball valve Teflon-ring | Motor drive ball valve Teflon-ring | Check valve | Vent valve O-ring

BAKEABLE ALL-METAL VALVES / TEFLON COATING VALVES

Angle valve Bellows | Straight through valve Bellows | Manual PTFE angle valve O-ring | Pneumatic PTFE angle valve O-ring | Pneumatic PTFE Y-inline valve O-ring

All information contained herein was current at time of publication, we reserve the right to change the design/specification for products improvement without notice.

Type / Size	Shaft seal	HV VALVE											
		KF 10	KF 16	KF 25	KF 40	KF 50	ISO 63	ISO 80	ISO 100	ISO 160	ISO 200	ISO 250	ISO 320
VACUUM POPPET VALVES													
ANGLE VALVE (Manual & Pneumatic)	Bellows O-ring												
LARGE ANGLE VALVE (Manual & Pneumatic)	Bellows O-ring												
Y-INLINE VALVE (Manual & Pneumatic)	Bellows O-ring												
Z-INLINE VALVE (Manual & Pneumatic)	Bellows O-ring												
Formed Bellows Seal Stainless Valve (Pneumatic)	Bellows												
ALUMINUM BLOCK VALVES													
Pneumatic All-in-one angle valve	Bellows												
Pneumatic aluminum angle valve	Bellows O-ring												
Manual aluminum angle valve	Bellows O-ring												
BUTTERFLY VALVES													
LV Manual butterfly valve	O-ring												
HV Manual butterfly valve	O-ring												
Pneumatic butterfly valve	O-ring												
3-Position butterfly valve	O-ring												
APC butterfly valve	O-ring												
BALL VALVES													
Manual ball valves	Teflon-ring												
Pneumatic ball valve	Teflon-ring												
Motor Drive ball valve	Teflon-ring												
CHECK VALVES													
Check Valve													
VENT VALVES													
Vent valve	O-ring												
BAKEABLE ALL- METAL VALVES													
Angle valve	Bellows												
Straight through valve	Bellows												
TEFLON COATING VALVES													
Manual PTFE Angle Valve	O-ring												
Pneumatic PTFE Angle Valve	O-ring												
Pneumatic PTFE Y-inline Valve	O-ring												

Dimension in mm unless otherwise noted

All information contained herein was current at time of publication, we reserve the right to change the design/specification for products improvement without notice.

兴生机械科技
XingSheng Machinery Technology

06 VACUUM VALVE

Type / Size	Shaft seal	UHV VALVE							
		CF 16	CF 35	CF 63	CF 100	CF 150	CF 200	CF 250	CF 300
VACUUM POPPET VALVES									
ANGLE VALVE (Manual & Pneumatic)	Bellows O-ring								
LARGE ANGLE VALVE (Manual & Pneumatic)	Bellows O-ring								
Y-INLINE VALVE (Manual & Pneumatic)	Bellows O-ring								
Z-INLINE VALVE (Manual & Pneumatic)	Bellows O-ring								
Formed Bellows Seal Stainless Valve (Pneumatic)	Bellows								
ALUMINUM BLOCK VALVES									
Pneumatic All-in-one angle valve	Bellows								
Pneumatic aluminum angle valve	Bellows O-ring								
Manual aluminum angle valve	Bellows O-ring								
BUTTERFLY VALVES									
LV Manual butterfly valve	O-ring								
HV Manual butterfly valve	O-ring								
Pneumatic butterfly valve	O-ring								
3-Position butterfly valve	O-ring								
APC butterfly valve	O-ring								
BALL VALVES									
Manual ball valves	Teflon-ring								
Pneumatic ball valve	Teflon-ring								
Motor Drive ball valve	Teflon-ring								
CHECK VALVES									
Check Valve									
VENT VALVES									
Vent valve	O-ring								
BAKEABLE ALL- METAL VALVES									
Angle valve	Bellows								
Straight through valve	Bellows								
TEFLON COATING VALVES									
Manual PTFE Angle Valve	O-ring								
Pneumatic PTFE Angle Valve	O-ring								
Pneumatic PTFE Y-inline Valve	O-ring								

Dimension in mm unless otherwise noted

All information contained herein was current at time of publication, we reserve the right to change the design/specification for products improvement without notice.

General Information

Features

- Htc is pleased to offer vacuum valves designed and manufactured in Tainan, Taiwan, R.O.C. These valves are the result of a long and careful development program designed to insure product quality, reliability and value. Every effort has been made to provide a valve family suited to the requirements of various users.

  They will function reliably in applications ranging from semiconductor production system with chemical and particulate contamination.

- Long life operation.
- Bakeable to 200°C intermittently, Viton seal bonnet.
- Simple control via solenoid valve with manual override.
- Stainless steel welded bellows seal.
- Compact size.
- Simple and fast maintenance.
- Manual and electropneumatic actuation or fail safe operators (closes in the event of air pressure loss).

Specifications

- Body : 304 S.S. (Other material available upon request)
- Poppet : 304 S.S. (Other material available upon request)
- Bellows : Welded AM-350 (option)
- Solenoid : Option
- Position indicator : Option
- Seal : Viton O'ring
- Leak rate : $2x10^{-9}$ mbar.l/s
- Pressure range : $1x10^{-9}$ mbar to 1000 mbar Viton seal bonnet
- Maximum pressure before opening : 1.2 Bar
- Operating air pressure : 4~6.5 kg/cm^2
- Cycles until service : Bellows Type : 16 to 50~500,000 ; 63 to 150~250,000 ; 200 to 250 ~ 80,000
  : No Bellows Type : 16 to 50~200,000 ; 63 to 250~100,000 (Depend on O'ring Condition)
  (No Bellows Type Suggest to install in vertical orientation)

- Bake-out limitation :

Bake Temperature	Valve body	O-ring bonnet seal	Open ≤ 100°C
			Close ≤ 100°C
		metal bonnet seal	Open ≤ 200°C
			Close ≤ 150°C
	Manual and pneumatic actuator		≤ 80°C

- **Larger or special size available upon request**

Applications

- KF, ISO and ANSI port models are designed for high vacuum applications where vacuum pressures approximate 10^{-9} torr and bake-out temperature do not exceed 150°C. The standard international KF/ISO configurations and ANSI configurations are used in areas requiring an easily mountable and demountable flange type seal.

- CF port models are designed for ultra-high vacuum applications where the vacuum pressure approximates 10^{-10} torr and bake-out temperatures do not exceed 200°C. These valves are used in applications during an OFHC copper gasket rather the conventional Viton O'ring because of higher bake-out temperatures, lower vacuum pressures, (minimal outgassing) and reduced permeability. They are also commonly used in applications requiring a more permanent seal.

Dimension in mm unless otherwise noted
All information contained herein was current at time of publication, we reserve the right to change the design/specification for products improvement without notice.

兴生机械科技 XingSheng Machinery Technology

06 VACUUM VALVE

Manually Operated Angle Valve

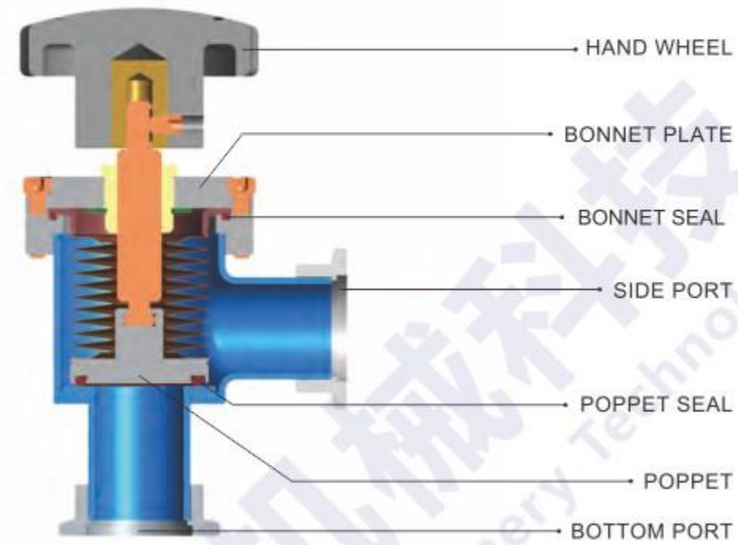

Pneumatically Actuated Y-In-Line Valve

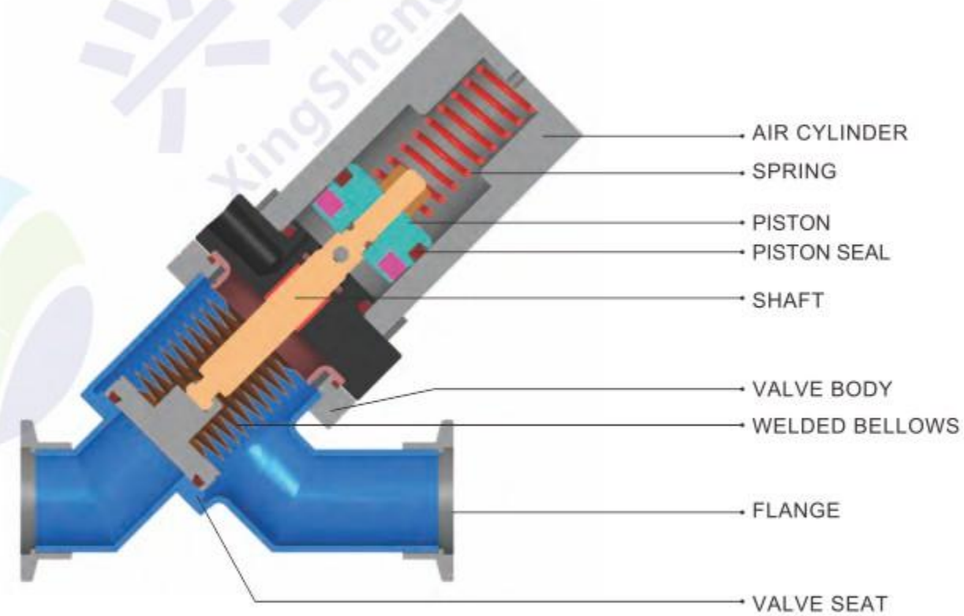

Dimension in mm unless otherwise noted
All information contained herein was current at time of publication, we reserve the right to change the design/specification for products improvement without notice.

Ordering Information

□□□□ □□ □ □ □ □ □ □ □

VALVE 3000series (Table 1)

SIZE (Table 2)

ACTUATOR
- 0 = Manual
- 1 = pneumatic(spring to close)
- 2 = double pneumatic
- 4 = pneumatic(spring to Open)
- 5 = pneumatic(spring to close) Heating Jacket(110V)
- 6 = pneumatic(spring to close) Heating Jacket(220V)
- 7 = double pneumatic Heating Jacket(110V)
- 8 = double pneumatic Heating Jacket(220V)

FLANGE TYPEV
- 0 = Tube End
- 1 = KF
- 2 = CF
- 3 = CR
- 4 = ISO
- 5 = ANSI
- 6 = VF
- 7 = VG
- 8 = ISO (B)

SOLENOID VOLTAGE
- 0 = No Solenoid
- 1 = 24VDC
- 2 = 110VAC
- 3 = 220VAC
- 4 = 24VAC(50HZ/60HZ)
- 5 = 12VDC

POSITION INDICATOR
- 0 = No reed sensor
- 1 = 1 reed sensor
- 2 = 2 reed sensor
- 3 = micro-switch
- 4 = micro-switch+6 Pin connector (male)
- 5 = 1 reed sensor (NPN)
- 6 = 2 reed sensor (NPN)
- 7 = 1 reed sensor (PNP)
- 8 = 2 reed sensor (PNP)

BODY MATERIAL
- 1 = SUS304
- 2 = Aluminum
- 3 = One piece
- 4 = SUS316
- 5 = SUS304(Teflon coating)
- 6 = SUS304 (Block)
- 7 = SUS316L
- 8 = SUS304L
- E = SUS304(EP)

Blank = Without LOGO
M = LOGO

BELLOWS
- 0 = No bellows
- 1 = Stainless corrugated bellows
- 2 = 304ss welded bellows
- 3 = 304Lss welded bellows
- 4 = 316ss welded bellows
- 5 = 316Lss welded bellows
- 6 = AM350 welded bellows
- 7 = Inconel 625 welded bellows
- 8 = Inconel 718 welded bellows
- A = Formed Bellows SUS316Ti

Dimension in mm unless otherwise noted
All information contained herein was current at time of publication, we reserve the right to change the design/specification for products improvement without notice.

兴生机械科技
XingSheng Machinery Technology

06 VACUUM VALVE

Table1 Valve 3000 Series

	VALVE	U.S.A.	Series code
Angle Valve 3001-3009	VITON POPPET	BONNET SEAL	3001
	FFKM POPPET	BONNET SEAL	3003
	FFKM POPPET	METAL BONNET SEAL	3004
	BAKEABLE ALL-METAL		3005
	VITON POPPET	METAL BONNET SEAL	3006
	Teflon Coating-VITON POPPET	BONNET SEAL	3007
	Teflon Coating- FFKM POPPET	BONNET SEAL	3008
High Cycle Angle valve 3011-3019	VITON POPPET	BONNET SEAL	3011
Z-Inline Valve 3021-3039	VITON POPPET	BONNET SEAL	3021
	FFKM POPPET	BONNET SEAL	3023
	FFKM POPPET	METAL BONNET SEAL	3024
	BAKEABLE ALL-METAL		3025
	VITON POPPET	BONNET SEAL	3026
	Teflon Coating-VITON POPPET	BONNET SEAL	3027
	Teflon Coating- FFKM POPPET	BONNET SEAL	3028
High Cycle Z-Inline valve 3031-3039	VITON POPPET	BONNET SEAL	3031
Y-Inline Valve 3041-3049	VITON POPPET	BONNET SEAL	3041
	FFKM POPPET	BONNET SEAL	3043
	FFKM POPPET	METAL BONNET SEAL	3044
	BAKEABLE ALL-METAL		3045
	VITON POPPET	METAL BONNET SEAL	3046
	Teflon Coating-VITON POPPET	BONNET SEAL	3047
	Teflon Coating- FFKM POPPET	BONNET SEAL	3048
High Cycle Y-Inline valve 3051-3059	VITON POPPET	BONNET SEAL	3051
Tee Valve 3061-3069	VITON POPPET	BONNET SEAL	3061
	FFKM POPPET	BONNET SEAL	3063
	FFKM POPPET	METAL BONNET SEAL	3064
	BAKEABLE ALL-METAL		3065
	VITON POPPET	METAL BONNET SEAL	3066
	Teflon Coating-VITON POPPET	BONNET SEAL	3067
	Teflon Coating- FFKM POPPET	BONNET SEAL	3068
Straight-Through 3071-3079	VITON POPPET	BONNET SEAL	3071
	FFKM POPPET	BONNET SEAL	3073
	FFKM POPPET	METAL BONNET SEAL	3074
	BAKEABLE ALL-METAL		3075
	VITON POPPET	METAL BONNET SEAL	3076
	Teflon Coating-VITON POPPET	BONNET SEAL	3077
	Teflon Coating- FFKM POPPET	BONNET SEAL	3078
TWO STAGE 3501-3509	VITON POPPET	BONNET SEAL	3501

Dimension in mm unless otherwise noted
All information contained herein was current at time of publication, we reserve the right to change the design/specification for products improvement without notice.

Table 1. Continuous

	VALVE	U.S.A.	Series code
Angle Valve 3101-3109	VITON POPPET	BONNET SEAL	3101
	FFKM POPPET	BONNET SEAL	3103
	FFKM POPPET	METAL BONNET SEAL	3104
	BAKEABLE ALL-METAL		3105
	VITON POPPET	METAL BONNET SEAL	3106
	Teflon Coating-VITON POPPET	BONNET SEAL	3107
	Teflon Coating- FFKM POPPET	BONNET SEAL	3108
High Cycle Angle valve 3111-3119	VITON POPPET	BONNET SEAL	3111
Z-Inline Valve 3121-3129	VITON POPPET	BONNET SEAL	3121
	FFKM POPPET	BONNET SEAL	3123
	FFKM POPPET	METAL BONNET SEAL	3124
	BAKEABLE ALL-METAL		3125
	VITON POPPET	BONNET SEAL	3126
	Teflon Coating-VITON POPPET	BONNET SEAL	3127
	Teflon Coating- FFKM POPPET	BONNET SEAL	3128
High Cycle Z-Inline valve 3131-3139	VITON POPPET	BONNET SEAL	3131
Y-Inline Valve 3141-3159	VITON POPPET	BONNET SEAL	3141
	FFKM POPPET	BONNET SEAL	3143
	FFKM POPPET	METAL BONNET SEAL	3144
	BAKEABLE ALL-METAL		3145
	VITON POPPET	METAL BONNET SEAL	3146
	Teflon Coating-VITON POPPET	BONNET SEAL	3147
	Teflon Coating- FFKM POPPET	BONNET SEAL	3148
High Cycle Y-Inline valve 3111-3119	VITON POPPET	BONNET SEAL	3151
Tee Valve 3161-3169	VITON POPPET	BONNET SEAL	3161
	FFKM POPPET	BONNET SEAL	3163
	FFKM POPPET	METAL BONNET SEAL	3164
	BAKEABLE ALL-METAL		3165
	VITON POPPET	METAL BONNET SEAL	3166
	Teflon Coating-VITON POPPET	BONNET SEAL	3167
	Teflon Coating- FFKM POPPET	BONNET SEAL	3168
Straight-Through 3171-3179	VITON POPPET	BONNET SEAL	3171
	FFKM POPPET	BONNET SEAL	3173
	FFKM POPPET	METAL BONNET SEAL	3174
	BAKEABLE ALL-METAL		3175
	VITON POPPET	METAL BONNET SEAL	3176
	Teflon Coating-VITON POPPET	BONNET SEAL	3177
	Teflon Coating- FFKM POPPET	BONNET SEAL	3178

Dimension in mm unless otherwise noted

All information contained herein was current at time of publication, we reserve the right to change the design/specification for products improvement without notice.

兴生机械科技
XingSheng Machinery Technology

06 VACUUM VALVE

Table 2. Dimension

Codes and Dimensions Description							
01 ~ 99TUBE (Fractional)		1A ~ 9Z TUBE (Metric)		A1 ~ Z9 PIPE (ANSI)		AA ~ ZZ PIPE (JIS)	
Code	Dimension	Code	Dimension	Code	Dimension	Code	Dimension
01	1/16"	1A	2	A1	1/8"	AA	6(1/8")
02	1/8"	1B	3	A2	1/4"	AB	8(1/4")
03	3/16"	1C	4	A3	3/8"	AC	10(3/8")
04	1/14"	1D	6	A4	1/2"	AD	15(1/2")
05	5/16"	1E	8	A5	3/4"	AE	20(3/4")
06	3/8"	1F	10	A6	1"	AF	25(1")00
07	1/2"	1G	12	A7	1-1/4"	AG	32(1-1/4")
08	5/8"	1H	16	A8	1-1/2"	AH	40(1-1/2")
09	3/4"(16)	1J	20	A9	2"	AJ	50(2")
10	7/8"	1K	22	B1	2-1/2"	AK	65(2-1/2")
11	1"(25)	1L	25	B2	3"	AL	80(3")
12	1-1/4"	1M		B3	3-1/2"	AM	90(3-1/2")
13	1-1/2"(40)	1N		B4	4"	AN	100(4")
14	2"(50)	1P		B5	5"	AP	125(5")
15	2-1/2"(63)	1Q		B6	6"	AQ	150(6")
16	3"(80)	1R		B7	8"	AR	100(4")
17	3-1/2"	1S		B8	10"	AS	125(5")
18	4"(100)	1T		B9	12"	AT	150(6")
19	5"	1U		C1		AU	200(8")
20	6"(160)	1V		C2		AV	250(10")
21	8"(200)	1W		C3		AW	300(12")
22	10"(250)	1X		C4		AX	
23	12"	1Y		C5		AY	
24	14"	1Z		C6		AZ	
25	16"	E5	45				
26	18"	EM	57				
27	20"	D8	28				
28	22"						
29	24"						

Dimension in mm unless otherwise noted

All information contained herein was current at time of publication, we reserve the right to change the design/specification for products improvement without notice.

VACUUM POPPET VALVES - ANGLE VALVE

Manually Operated with Bellows

KF Flange

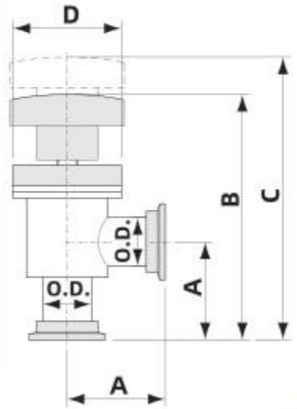

Features

- Stainless steel body surface treatment : below 4" puff polishing
- 3/4~2 inch(19.05~50.8mm) port ODs.
- Viton Seal Bonnet : 10^{-9} mbar vacuum rating KF flange

Available Area : U.S.A.

Model No.	A"(mm)	B"(mm)	C"(mm)	D"(mm)	O.D."(mm)	Parts No.
AVB-KF16-M	2.15"(54.6)	5.41"(136.5)	6.15"(156)	2.24"(56.8)	0.75"(19.05)	300109010016
AVB-KF25-M	2.03"(51.6)	5.13"(130.2)	5.89"(149.7)	2.24"(56.8)	1.00"(25.4)	300111010016
AVB-KF40-M	2.40"(61)	6.43"(163.5)	7.48"(196)	2.98"(75.8)	1.50"(38.1)	300113010016
AVB-KF50-M	3.40"(86.3)	8.15"(207)	9.91"(251.7)	3.48"(88.4)	2.00"(50.8)	300114010016

Note: Dimension in inch(mm) unless otherwise noted

Available Area : Europe

Special Sizes Available Upon Request

Model No.	A	B	C	D	O.D.	Parts No.
AVB-KF16-M-E	40	121.9	141.5	56.8	19.05	310109010016
AVB-KF25-M-E	50	128.6	148.1	56.8	25.4	310111010016
AVB-KF40-M-E	65	167.5	200	75.8	38.1	310113010016
AVB-KF50-M-E	70	190.5	235.5	88.4	50.8	310114010016

Dimension in mm unless otherwise noted

All information contained herein was current at time of publication, we reserve the right to change the design/specification for products improvement without notice.

兴生机械科技
XingSheng Machinery Technology

06 VACUUM VALVE

VACUUM POPPET VALVES - ANGLE VALVE

Manually Operated with Bellows

CF Flange

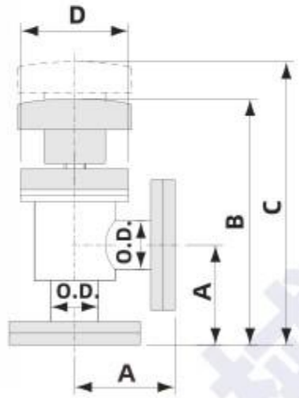

Features

- Stainless steel body surface treatment : below 4" puff polishing
- 3/4~3 inch(19.05~76.2mm) port ODs.
- Viton Seal Bonnet : 10^{-9} mbar vacuum rating CF flange

Available Area : U.S.A.

Model No.	A"(mm)	B"(mm)	C"(mm)	D"(mm)	O.D."(mm)	Parts No.
AVB-CR16-M	2.05"(63.5)	5.72"(145.4)	6.50"(164.9)	2.24"(56.8)	0.75"(19.05)	300109030016
AVB-CR35-M	2.46"(62.5)	6.50"(165)	7.78"(197.5)	2.98"(75.8)	1.50"(38.1)	300113030016
AVB-CR63-M	3.37"(85.7)	8.75"(222.2)	10.42"(264.6)	3.92"(99.5)	2.50"(63.5)	300115030016

Note: Dimension in inch(mm) unless otherwise noted

Available Area : Europe

Special Sizes Available Upon Request

Model No.	A	B	C	D	O.D.	Parts No.
AVB-CR16-M-E	38	119.9	139.5	56.8	19.05	310109030016
AVB-CR35-M-E	63	165.5	198	75.8	38.1	310113030016
AVB-CR63-M-E	105	241.5	283.9	99.5	63.5	310115030016

Dimension in mm unless otherwise noted

All information contained herein was current at time of publication, we reserve the right to change the design/specification for products improvement without notice.

VACUUM POPPET VALVES - ANGLE VALVE

Manually Operated with Bellows

ISO Flange

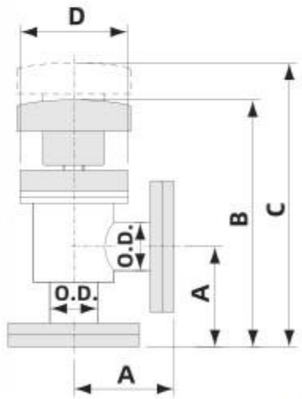

Features

- Stainless steel body surface treatment : below 4" puff polishing
- 2.5~3 inch(63.5~76.2mm) port ODs.
- Viton Seal Bonnet : 10^{-9} mbar vacuum rating ISO flange

Available Area : U.S.A.

Model No.	A"(mm)	B"(mm)	C"(mm)	D"(mm)	O.D."(mm)	Parts No.
AVB-ISO63-M	3.26"(82.8)	8.63"(219.3)	10.30"(261.7)	3.92"(99.5)	2.50"(63.5)	300115040016
AVB-ISO80-M	3.51"(89.1)	8.95"(227.4)	10.83"(275)	4.49"(114)	3.00"(76.2)	300116040016

Note: Dimension in inch(mm) unless otherwise noted

Available Area : Europe

Special Sizes Available Upon Request

Model No.	A	B	C	D	O.D.	Parts No.
AVB-ISO63-M-E	88	224.5	266.9	99.5	63.5	310115040016
AVB-ISO80-M-E	98	236.3	283.9	114	76.2	310116040016

Dimension in mm unless otherwise noted
All information contained herein was current at time of publication, we reserve the right to change the design/specification for products improvement without notice.

兴生机械科技
XingSheng Machinery Technology

06 VACUUM VALVE

VACUUM POPPET VALVES - ANGLE VALVE

Manually Operated without Bellows

KF Flange

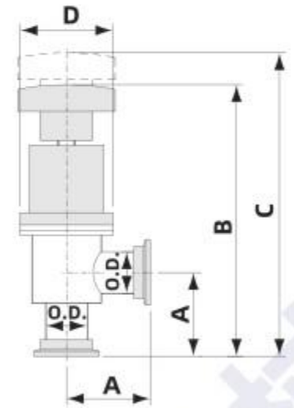

Features

- Stainless steel body surface treatment : below 4" puff polishing
- Viton Seal Bonnet : 10^{-9} mbar vacuum rating KF flange

Available Area : U.S.A.

Model No.	A"(mm)	B"(mm)	C"(mm)	D"(mm)	O.D. "(mm)	Parts No.
AV-KF16-M	2.15"(54.6)	6.59"(167.5)	7.22"(183.3)	2.24"(56.8)	0.75"(19.05)	300109010010
AV-KF25-M	2.03"(51.6)	6.35"(161.2)	6.97"(177)	2.24"(56.8)	1.00"(25.4)	300111010010
AV-KF40-M	2.40"(61)	7.50"(190.5)	8.78"(223)	2.98"(75.8)	1.50"(38.1)	300113010010
AV-KF50-M	3.40"(86.3)	9.80"(249)	11.39"(291.6)	3.48"(88.4)	2.00"(50.8)	300114010010

Note: Dimension in inch(mm) unless otherwise noted

Available Area : Europe

Special Sizes Available Upon Request

Model No.	A	B	C	D	O.D.	Parts No.
AV-KF16-M-E	40	152.9	168.7	56.8	19.05	310109010010
AV-KF25-M-E	50	159.6	175.4	56.8	25.4	310111010010
AV-KF40-M-E	65	194.5	227	75.8	38.1	310113010010
AV-KF50-M-E	70	232.7	273.1	88.4	50.8	310114010010

Dimension in mm unless otherwise noted
All information contained herein was current at time of publication, we reserve the right to change the design/specification for products improvement without notice.

VACUUM POPPET VALVES - ANGLE VALVE

Manually Operated Copper Seal Bonnet with Bellows

KF Flange

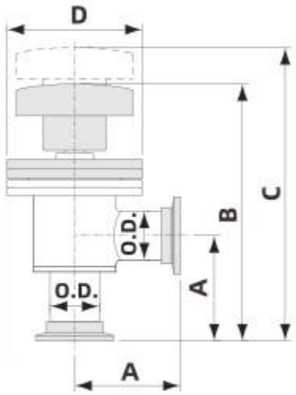

Features

- Stainless steel body surface treatment : below 4" puff polishing
- Bakeable to 150°C
- Metal Seal Bonnet : 10^{-9} mbar vacuum rating KF flange

Available Area : U.S.A.

Model No.	A"(mm)	B"(mm)	C"(mm)	D"(mm)	O.D. "(mm)	Parts No.
AVB-CU-KF16-M	2.15"(54.6)	5.24"(136.5)	6.01"(157.4)	2.75"(70)	0.75"(19.05)	300609010016
AVB-CU-KF25-M	2.03"(51.6)	5.11"(130.2)	5.89"(151.1)	2.75"(70)	1.00"(25.4)	300611010016
AVB-CU-KF40-M	2.40"(61)	6.62"(163.5)	7.85"(196.5)	3.33"(84.6)	1.50"(38.1)	300613010016
AVB-CU-KF50-M	3.40"(86.3)	8.14"(207)	9.95"(252.8)	4.47"(113.6)	2.00"(50.8)	300614010016

Note: Dimension in inch(mm) unless otherwise noted

VACUUM POPPET VALVES - ANGLE VALVE

Manually Operated Copper Seal Bonnet with Bellows

CF Flange

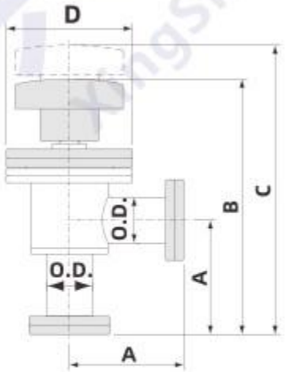

Features

- Stainless steel body surface treatment : below 4"puff polishing
- Bakeable to 200°C(open),150°C(close)
- Metal Seal Bonnet : approximate 10^{-10} mbar vacuum rating CF flange

Available Area : U.S.A.

Model No.	A"(mm)	B"(mm)	C"(mm)	D"(mm)	O.D. "(mm)	Parts No.
AVB-CU-CR16-M	2.50"(63.5)	5.58"(145.4)	6.36"(166.3)	2.75"(70)	0.75"(19.05)	300609030016
AVB-CU-CR35-M	2.45"(62.5)	6.68"(165)	7.90"(198)	3.33"(84.6)	1.50"(38.1)	300613030016
AVB-CU-CR63-M	3.38"(85.7)	8.72"(222.2)	10.42"(264.7)	4.62"(117.4)	2.50"(63.5)	300615030016

Note: Dimension in inch(mm) unless otherwise noted

Dimension in mm unless otherwise noted
All information contained herein was current at time of publication, we reserve the right to change the design/specification for products improvement without notice.

兴生机械科技 XingSheng Machinery Technology

06 VACUUM VALVE

VACUUM POPPET VALVES - ANGLE VALVE

Pneumatically Actuated with Bellows

Single-Acting, air to open, spring to close

KF Flange

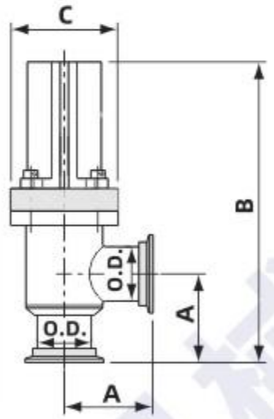

Features

- Stainless steel body surface treatment : below 4" puff polishing
- 3/4~2 inch(19.05~50.8mm) port ODs.
- 4~6.5 kg/cm^2 operating air pressure.
- Viton Seal Bonnet : 10^{-9} mbar vacuum rating KF flange

Available Area : U.S.A.

Model No.	A"(mm)	B"(mm)	C"(mm)	O.D."(mm)	Parts No.
AVB-KF16-P	2.15"(54.6)	6.78"(172.2)	2.24"(56.8)	0.75"(19.05)	300109110016
AVB-KF25-P	2.03"(51.6)	6.53"(165.9)	2.24"(56.8)	1.00"(25.4)	300111110016
AVB-KF40-P	2.40"(61)	8.28"(210.2)	2.98"(75.8)	1.50"(38.1)	300113110016
AVB-KF50-P	3.40"(86.3)	11.08"(267.6)	3.48"(88.4)	2.00"(50.8)	300114110016

Note: Dimension in inch(mm) unless otherwise noted

Available Area : Europe

Special Sizes Available Upon Request

Model No.	A	B	C	O.D.	Parts No.
AVB-KF16-P-E	40	158	56.8	19.05	310109110016
AVB-KF25-P-E	50	164.3	56.8	25.4	310111110016
AVB-KF40-P-E	65	214	75.8	38.1	310113110016
AVB-KF50-P-E	70	251.3	88.4	50.8	310114110016

Dimension in mm unless otherwise noted
All information contained herein was current at time of publication, we reserve the right to change the design/specification for products improvement without notice.

VACUUM POPPET VALVES - ANGLE VALVE

Pneumatically Actuated with Bellows

Single-Acting, air to open, spring to close

CF Flange

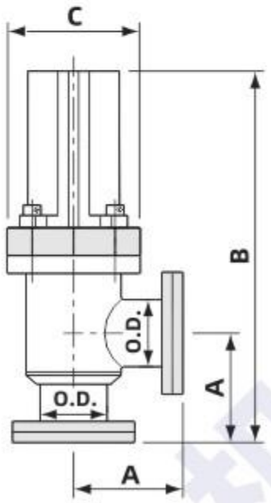

Features

- Stainless steel body surface treatment : below 4" puff polishing
- 3/4~3 inch(19.05~76.2mm) port ODs.
- 4~6.5 kg/cm^2 operating air pressure.
- Viton Seal Bonnet : 10^{-9} mbar vacuum rating CF flange

Available Area : U.S.A.

Model No.	A"(mm)	B"(mm)	C"(mm)	O.D."(mm)	Parts No.
AVB-CR16-P	2.50"(63.5)	7.13"(181.1)	2.24"(56.8)	0.75"(19.05)	300109130016
AVB-CR35-P	2.46"(62.5)	8.33"(211.7)	2.98"(75.8)	1.50"(38.1)	300113130016

Note: Dimension in inch(mm) unless otherwise noted

Available Area : Europe

Special Sizes Available Upon Request

Model No.	A	B	C	O.D.	Parts No.
AVB-CR16-P-E	38	155.6	56.8	19.05	310109130016
AVB-CR35-P-E	63	212	75.8	38.1	310113130016

Dimension in mm unless otherwise noted
All information contained herein was current at time of publication, we reserve the right to change the design/specification for products improvement without notice.

兴生机械科技
XingSheng Machinery Technology

06 VACUUM VALVE

VACUUM POPPET VALVES - ANGLE VALVE

Pneumatically Actuated without Bellows

Single-Acting, air to open, spring to close

KF Flange

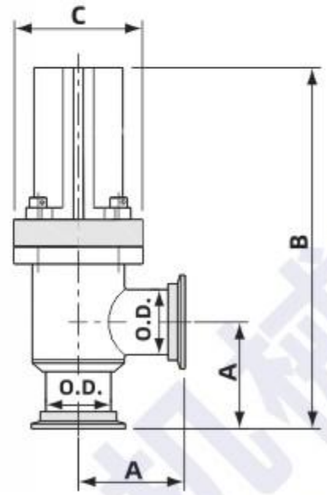

Features

- Stainless steel body surface treatment : below 4" puff polishing
- 3/4~2 inch(19.05~50.8mm) port ODs.
- 4~6.5 kg/cm^2 operating air pressure.
- Viton Seal Bonnet : 10^{-9} mbar vacuum rating KF flange

Available Area : U.S.A.

Model No.	A"(mm)	B"(mm)	C"(mm)	O.D."(mm)	Parts No.
AV-KF16-P	2.15"(54.6)	6.78"(172.2)	2.24"(56.8)	0.75"(19.05)	300109110010
AV-KF25-P	2.03"(51.6)	6.53"(165.9)	2.24"(56.8)	1.00"(25.4)	300111110010
AV-KF40-P	2.40"(61)	8.28"(210.2)	2.98"(75.8)	1.50"(38.1)	300113110010
AV-KF50-P	3.40"(86.3)	11.08"(267.6)	3.48"(88.4)	2.00"(50.8)	300114110010

Note: Dimension in inch(mm) unless otherwise noted

Available Area : Europe

Special Sizes Available Upon Request

Model No.	A	B	C	O.D.	Parts No.
AV-KF16-P-E	40	158	56.8	19.05	310109110010
AV-KF25-P-E	50	164.3	56.8	25.4	310111110010
AV-KF40-P-E	65	214	75.8	38.1	310113110010
AV-KF50-P-E	70	251.3	88.4	50.8	310114110010

Dimension in mm unless otherwise noted
All information contained herein was current at time of publication, we reserve the right to change the design/specification for products improvement without notice.

VACUUM POPPET VALVES - ANGLE VALVE

Pneumatically Actuated without Bellows

Single-Acting, air to open, spring to close

CF Flange

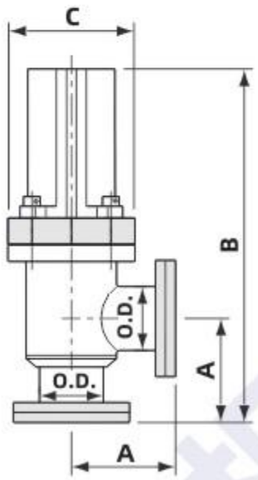

Features

- Stainless steel body surface treatment : below 4" puff polishing
- 3/4~2 inch(19.05~76.2mm) port ODs.
- 4~6.5 kg/cm^2 operating air pressure.
- Viton Seal Bonnet : 10^{-9} mbar vacuum rating CF flange

Available Area : U.S.A.

Model No.	A"(mm)	B"(mm)	C"(mm)	O.D."(mm)	Parts No.
AV-CR16-P	2.50"(63.5)	7.13"(181.1)	2.24"(56.8)	0.75"(19.05)	300109130010
AV-CR35-P	2.46"(62.5)	8.33"(211.7)	2.98"(75.8)	1.50"(38.1)	300113130010

Note: Dimension in inch(mm) unless otherwise noted

Available Area : Europe — **Special Sizes Available Upon Request**

Model No.	A	B	C	O.D.	Parts No.
AV-CR16-P-E	38	155.6	56.8	19.05	310109130010
AV-CR35-P-E	63	212	75.8	38.1	310113130010

Dimension in mm unless otherwise noted
All information contained herein was current at time of publication, we reserve the right to change the design/specification for products improvement without notice.

兴生机械科技
XingSheng Machinery Technology

06 VACUUM VALVE

VACUUM POPPET VALVES - ANGLE VALVE

Pneumatically Actuated with Bellows

Double-Acting, air to open, air to close

CF Flange

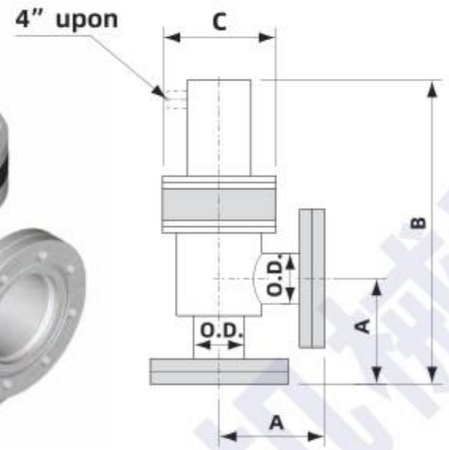

Features

- Stainless steel body surface treatment : below 4" puff polishing
- 2.5 inch (63.5mm) port ODs.
- 4~6.5 kg/cm^2 operating air pressure.
- Viton Seal Bonnet : 10^{-9} mbar vacuum rating CF flange

Available Area : U.S.A.

Model No.	A"(mm)	B"(mm)	C"(mm)	O.D."(mm)	Parts No.
AVB-CR63-P2	3.37"(85.7)	10.81"(274.6)	3.92"(99.5)	2.50"(63.5)	300115230016

Note: Dimension in inch(mm) unless otherwise noted

Available Area : Europe — **Special Sizes Available Upon Request**

Model No.	A	B	C	O.D.	Parts No.
AVB-CR63-P2-E	105	294	99.5	63.5	310115230016

Dimension in mm unless otherwise noted
All information contained herein was current at time of publication, we reserve the right to change the design/specification for products improvement without notice.

VACUUM POPPET VALVES - ANGLE VALVE

Pneumatically Actuated with Bellows

Double-Acting, air to open, air to close

ISO Flange

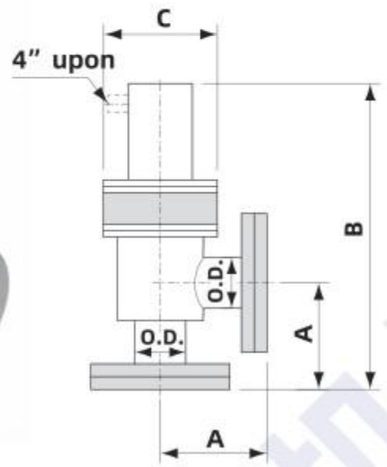

Features

- Stainless steel body surface treatment :
  1. below 4" puff polishing
  2. Above 4" (include 4") sand blasting
- 2.5~3 inch (63.5~76.2mm) port ODs.
- 4~6.5 kg/cm2 operating air pressure.
- Viton Seal Bonnet : 10^{-9} mbar vacuum rating ISO flange

Available Area : U.S.A.

Model No.	A"(mm)	B"(mm)	C"(mm)	O.D."(mm)	Parts No.
AVB-IS063-P2	3.26"(82.8)	10.70"(271.7)	3.92"(99.5)	2.50"(63.5)	300115240016
AVB-IS080-P2	3.51"(89.1)	10.95"(278)	4.49"(114)	3.00"(76.2)	300116240016

Note: Dimension in inch(mm) unless otherwise noted

Available Area : Europe — **Special Sizes Available Upon Request**

Model No.	A	B	C	O.D.	Parts No.
AVB-ISO63-P2-E	88	277	99.5	63.5	310115240016
AVB-ISO80-P2-E	98	294	114	76.2	310116240016

Dimension in mm unless otherwise noted
All information contained herein was current at time of publication, we reserve the right to change the design/specification for products improvement without notice.

兴生机械科技
XingSheng Machinery Technology

06 VACUUM VALVE

VACUUM POPPET VALVES - ANGLE VALVE

Pneumatically Actuated without Bellows

Double-Acting, air to open, air to close

CF Flange

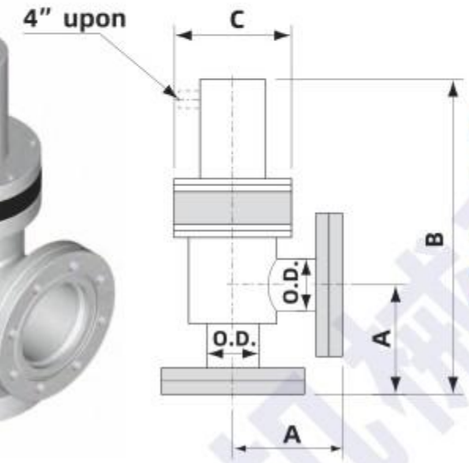

Features

- Stainless steel body surface treatment : below 4" puff polishing
- 2.5 inch (63.5mm) port ODs.
- 4~6.5 kg/cm^2 operating air pressure.
- Viton Seal Bonnet : 10^{-9} mbar vacuum rating CF flange

Available Area : U.S.A.

Model No.	A"(mm)	B"(mm)	C"(mm)	O.D."(mm)	Parts No.
AV-CR63-P2	3.37"(85.7)	10.81"(274.6)	3.92"(99.5)	2.50"(63.5)	300115230010

Note: Dimension in inch(mm) unless otherwise noted

Available Area : Europe — **Special Sizes Available Upon Request**

Model No.	A	B	C	O.D.	Parts No.
AV-CR63-P2-E	105	294	99.5	63.5	310115230010

Dimension in mm unless otherwise noted
All information contained herein was current at time of publication, we reserve the right to change the design/specification for products improvement without notice.

VACUUM POPPET VALVES - ANGLE VALVE

Pneumatically Actuated without Bellows

Double-Acting, air to open, air to close

ISO Flange

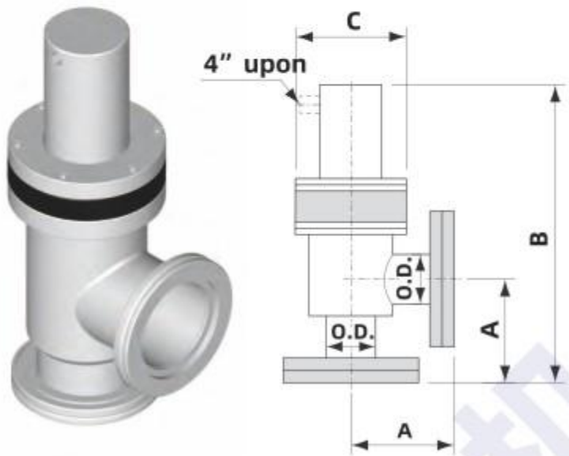

Features

- Stainless steel body surface treatment : below 4" puff polishing
- 2.5~3 inch(63.5~76.2mm) port ODs.
- 4~6.5 kg/cm^2 operating air pressure.
- Viton Seal Bonnet : 10^{-9} mbar vacuum rating ISO flange

Available Area : U.S.A.

Model No.	A"(mm)	B"(mm)	C"(mm)	O.D."(mm)	Parts No.
AV-ISO63-P2	3.26"(82.8)	10.70"(271.7)	3.92"(99.5)	2.50"(63.5)	300115240010
AV-ISO80-P2	3.51"(89.1)	10.95"(278)	4.49"(114)	3.00"(76.2)	300116240010

Note: Dimension in inch(mm) unless otherwise noted

Available Area : Europe

Special Sizes Available Upon Request

Model No.	A	B	C	O.D.	Parts No.
AV-ISO63-P2-E	88	277	99.5	63.5	310115240010
AV-ISO80-P2-E	98	287	114	76.2	310116240010

Dimension in mm unless otherwise noted
All information contained herein was current at time of publication, we reserve the right to change the design/specification for products improvement without notice.

兴生机械科技
XingSheng Machinery Technology

06 VACUUM VALVE

VACUUM POPPET VALVES - ANGLE VALVE

Pneumatically Actuated with Bellows Attached Reed Sensor

Single-Acting, air to open, spring to close

KF Flange

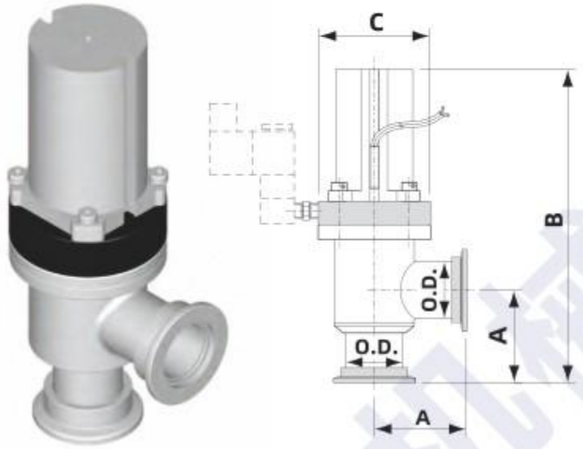

Features

- Stainless steel body surface treatment : below 4" puff polishing
- 3/4~2 inch(19.05~50.8mm) port ODs
- 4~6.5 kg/cm^2 operating air pressure.
- Sensor Specification : Voltage DC/AC 4~240V Amps : 5~40mA.
- Options Available : Air solenoid DC24V, AC24V, AC110V, AC220V.
- Viton Seal Bonnet : 10^{-9} mbar vacuum rating KF flange.

Available Area : U.S.A.

Model No.	A"(mm)	B"(mm)	C"(mm)	O.D."(mm)	Parts No.
AVBS-KF16-P	2.15"(54.6)	6.78"(172.2)	2.24"(56.8)	0.75"(19.05)	300109110216
AVBS-KF25-P	2.03"(51.6)	6.53"(165.9)	2.24"(56.8)	1.00"(25.4)	300111110216
AVBS-KF40-P	2.40"(61)	8.28"(210.2)	2.98"(75.8)	1.50"(38.1)	300113110216
AVBS-KF50-P	3.40"(86.3)	11.08"(267.6)	3.48"(88.4)	2.00"(50.8)	300114110216

Note: Dimension in inch(mm) unless otherwise noted

Available Area : Europe

Special Sizes Available Upon Request

Model No.	A	B	C	O.D.	Parts No.
AVBS-KF16-P-E	40	158	56.8	19.05	310109110216
AVBS-KF25-P-E	50	164.3	56.8	25.4	300111110216
AVBS-KF40-P-E	65	214	75.8	38.1	310113110216
AVBS-KF50-P-E	70	251.3	88.4	50.8	310114110216

Dimension in mm unless otherwise noted
All information contained herein was current at time of publication, we reserve the right to change the design/specification for products improvement without notice.

VACUUM POPPET VALVES - ANGLE VALVE

Pneumatically Actuated with Bellows Attached Reed Sensor

Single-Acting, air to open, spring to close

CF Flange

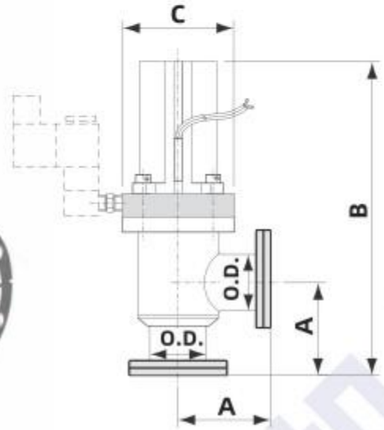

Features

- Stainless steel body surface treatment : below 4" puff polishing
- 3/4~2 inch(19.05~50.8mm) port ODs
- 4~6.5 kg/cm^2 operating air pressure.
- Sensor Specification : Voltage DC /AC 4~240V Amps : 5~40mA.
- Options Available : Air solenoid DC24V, AC24V, AC110V, AC220V.
- Viton Seal Bonnet : 10^{-9} mbar vacuum rating CF flange.

Available Area : U.S.A.

Model No.	A"(mm)	B"(mm)	C"(mm)	O.D."(mm)	Parts No.
AVBS-CR16-P	2.50"(63.5)	7.13"(181.1)	2.24"(56.8)	0.75"(19.05)	300109130216
AVBS-CR35-P	2.46"(62.5)	8.33"(211.7)	2.98"(75.8)	1.50"(38.1)	300113130216

Note: Dimension in inch(mm) unless otherwise noted

Available Area : Europe

Special Sizes Available Upon Request

Model No.	A	B	C	O.D.	Parts No.
AVBS-CR16-P-E	38	155.6	56.8	19.05	310109130216
AVBS-CR35-P-E	63	212	75.8	38.1	310113130216

Dimension in mm unless otherwise noted

All information contained herein was current at time of publication, we reserve the right to change the design/specification for products improvement without notice.

兴生机械科技
XingSheng Machinery Technology

LARGE ANGLE VALVE

Manually Operated with Bellows

ISO Flange

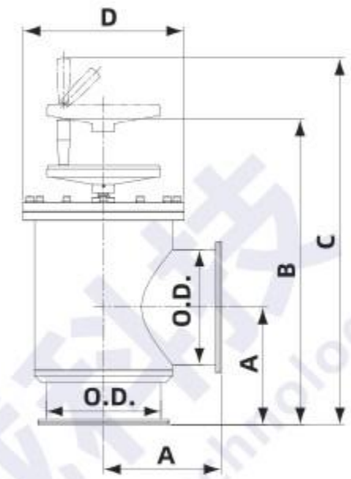

Available Area : U.S.A.

Model No.	A	B	C	D	O.D.	Parts No.
AVB-ISO100-M	113.5	340.3	404.3	151.6	101.6	300118040016
AVB-ISO160-M	159	437.5	512.5	240	152.4	300120040016
AVB-ISO200-M	209.5	548.4	678.1	250	203.2	300121040016
AVB-ISO250-M	260.6	631.1	761.1	325	254	300122040016

LARGE ANGLE VALVE

Manually Operated with Bellows

CF Flange

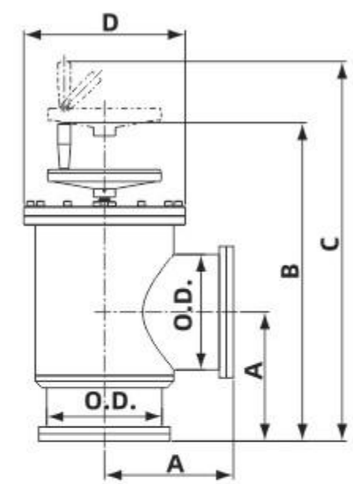

Available Area : U.S.A.

Model No.	A	B	C	D	O.D.	Parts No.
AVB-CR100-M	118	344.8	408.8	151.6	101.6	300118030016
AVB-CR150-M	165.1	443.6	518.6	240	152.4	300120030016
AVB-CR200-M	215.6	554.5	684.2	250	203.2	300121030016
AVB-CR250-M	269.8	640.3	326.7	325	254	300122030016

Dimension in mm unless otherwise noted

All information contained herein was current at time of publication, we reserve the right to change the design/specification for products improvement without notice.

LARGE ANGLE VALVE

Pneumatically Actuated with Bellows

Double-Acting, air to open, air to close

ISO Flange

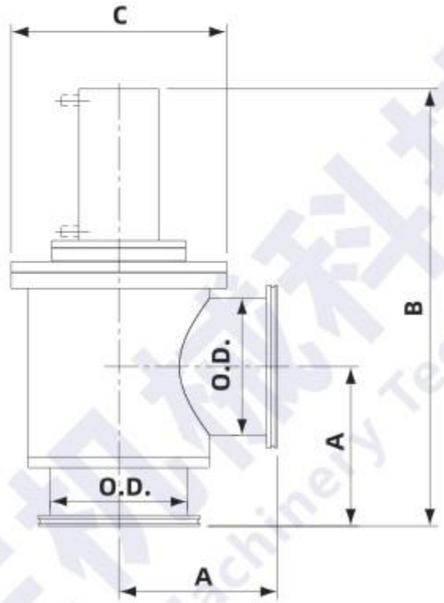

Available Area : U.S.A.

Model No.	A	B	C	O.D.	Parts No.
AVB-ISO100-P2	113.5	352.1	151.6	101.6	300118240016
AVB-ISO160-P2	159	432.5	240	152.4	300120240016
AVB-ISO200-P2	209.5	623.6	250	203.2	300121240016
AVB-ISO250-P2	260.6	641.5	325	254	300122240016

Available Area : Europe

Model No.	A	B	C	O.D.	Parts No.
AVB-ISO100-P2-E	130.5	369.1	151.6	101.6	310118240016
AVB-ISO160-P2-E	165	438.5	240	152.4	310120240016

Dimension in mm unless otherwise noted

All information contained herein was current at time of publication, we reserve the right to change the design/specification for products improvement without notice.

兴生机械科技
XingSheng Machinery Technology

06 VACUUM VALVE

LARGE ANGLE VALVE

Pneumatically Actuated with Bellows

Double-Acting, air to open, air to close

CF Flange

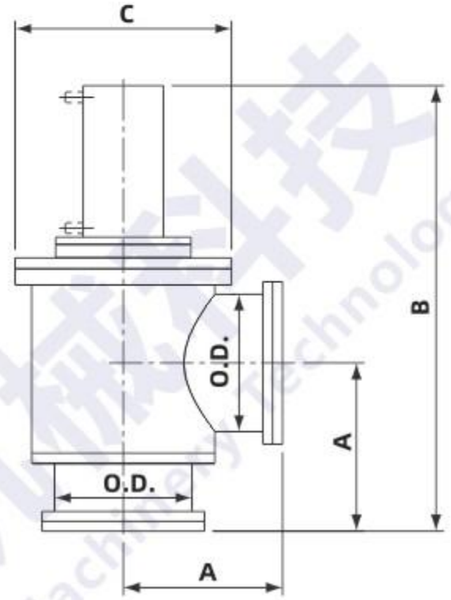

Available Area : U.S.A.

Model No.	A	B	C	O.D.	Parts No.
AVB-CR100-P2	118	356.6	151.6	101.6	300118230016
AVB-CR150-P2	165.1	438.6	240	152.4	300120230016
AVB-CR200-P2	215.6	629.7	250	203.2	300121230016
AVB-CR250-P2	260.6	641.5	325	254	300122230016

Available Area : Europe

Model No.	A	B	C	O.D.	Parts No.
AVB-CR100-P2-E	135	373.6	151.6	101.6	310118230016
AVB-CR150-P2-E	171.1	444.6	240	152.4	310120230016

Dimension in mm unless otherwise noted

All information contained herein was current at time of publication, we reserve the right to change the design/specification for products improvement without notice.

LARGE ANGLE VALVE

Manually Operated without Bellows

ISO Flange

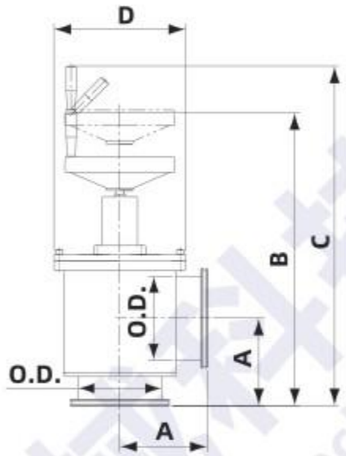

Available Area : U.S.A.

Model No.	A	B	C	D	O.D.	Parts No.
AV-ISO100-M	113.5	419.3	494.3	151.6	101.6	300118040010
AV-ISO160-M	159	531.7	616.7	240	152.4	300120040010
AV-ISO200-M	209.5	700	830	250	203.2	300121040010

LARGE ANGLE VALVE

Manually Operated without Bellows

CF Flange

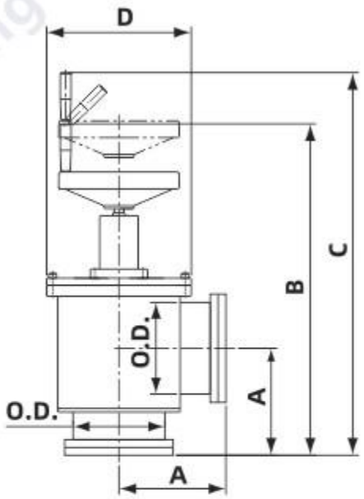

Available Area : U.S.A.

Model No.	A	B	C	D	O.D.	Parts No.
AV-CR100-M	118	423.8	498.8	151.6	101.6	300118030010
AV-CR150-M	165.1	537.8	622.8	240	152.4	300120030010
AV-CR200-M	215.6	706.1	836.1	250	203.2	300121030010

Dimension in mm unless otherwise noted

All information contained herein was current at time of publication, we reserve the right to change the design/specification for products improvement without notice.

兴生机械科技
XingSheng Machinery Technology

LARGE ANGLE VALVE

Pneumatically Actuated without Bellows

Double-Acting, air to open, air to close

ISO Flange

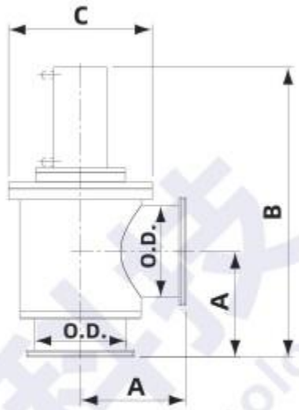

Available Area : U.S.A.

Model No.	A	B	C	O.D.	Parts No.
AV-ISO100-P2	113.5	352.1	151.6	101.6	300118240010
AV-ISO160-P2	159	432.5	240	152.4	300120240010
AV-ISO200-P2	209.5	623.6	250	203.2	300121240010
AV-ISO250-P2	260.6	641.5	325	254	300122240010

LARGE ANGLE VALVE

Pneumatically Actuated without Bellows

Double-Acting, air to open, air to close

CF Flange

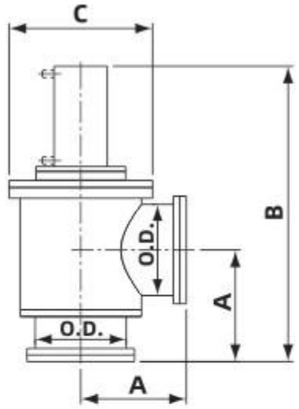

Available Area : U.S.A.

Model No.	A	B	C	O.D.	Parts No.
AV-CR100-P2	118	356.6	151.6	101.6	300118230010
AV-CR150-P2	165.1	438.6	240	152.4	300120230010
AV-CR200-P2	215.6	629.7	250	203.2	300121230010
AV-CR250-P2	269.8	650.7	325	254	300122230010

Available Area : Europe

Model No.	A	B	C	O.D.	Parts No.
AV-CR100-P2-E	135	387	151.6	101.6	310118230010

Dimension in mm unless otherwise noted

All information contained herein was current at time of publication, we reserve the right to change the design/specification for products improvement without notice.

Y-INLINE VALVE

Manually Operated with Bellows

KF Flange

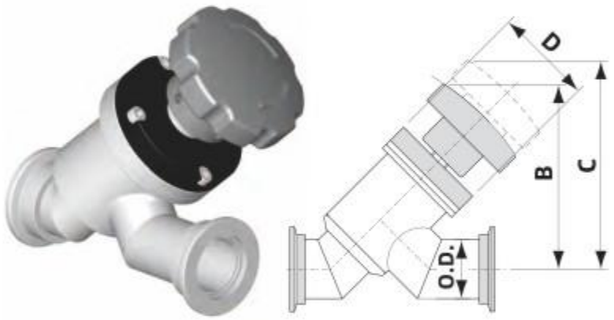

Features

- Stainless steel body surface treatment : below 4" puff polishing
- 3/4~2 inch(19.05~50.8mm) port ODs.
- Viton Seal Bonnet : 10^{-9} mbar vacuum rating KF flange

Available Area : U.S.A.

Model No.	A"(mm)	B"(mm)	C"(mm)	D"(mm)	O.D. "(mm)	Parts No.
YVB-KF16-M	4.00"(101.6)	3.89"(98.7)	4.43"(112.5)	2.24"(56.8)	0.75"(19.05)	304109010016
YVB-KF25-M	4.20"(106.8)	3.89"(98.8)	4.43"(112.6)	2.24"(56.8)	1.00"(25.4)	304111010016
YVB-KF40-M	5.12"(130)	4.89"(124.2)	5.80"(147.2)	2.98"(75.8)	1.50"(38.1)	304113010016
YVB-KF50-M	7.00"(177.8)	5.59"(141.9)	6.83"(173.5)	3.48"(88.4)	2.00"(50.8)	304114010016

Note: Dimension in inch(mm) unless otherwise noted

Y-INLINE VALVE

Manually Operated with Bellows

CF Flange

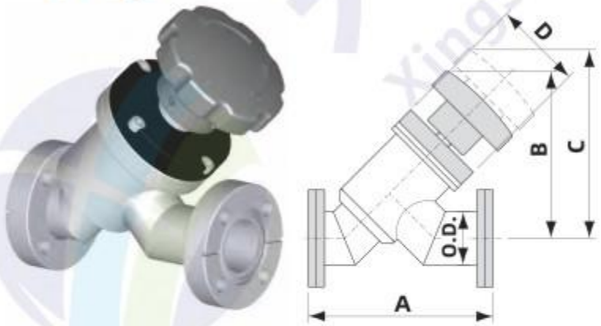

Features

- Stainless steel body surface treatment : below 4" puff polishing
- 3/4~2 inch(19.05~50.8mm) port ODs.
- Viton Seal Bonnet : 10^{-9} mbar vacuum rating CF flange

Available Area : U.S.A.

Model No.	A"(mm)	B"(mm)	C"(mm)	D"(mm)	O.D. "(mm)	Parts No.
YVB-CR16-M	4.7"(119.4)	3.89"(98.7)	4.43"(112.5)	2.24"(56.8)	0.75"(19.05)	304109030016
YVB-CR35-M	5.24"(133)	4.89"(124.2)	5.80"(147.2)	2.98"(75.8)	1.50"(38.1)	304113030016

Note: Dimension in inch(mm) unless otherwise noted

Dimension in mm unless otherwise noted
All information contained herein was current at time of publication, we reserve the right to change the design/specification for products improvement without notice.

兴生机械科技
XingSheng Machinery Technology

06 VACUUM VALVE

Y-INLINE VALVE

Manually Operated Copper Seal Bonnet with Bellows

KF Flange

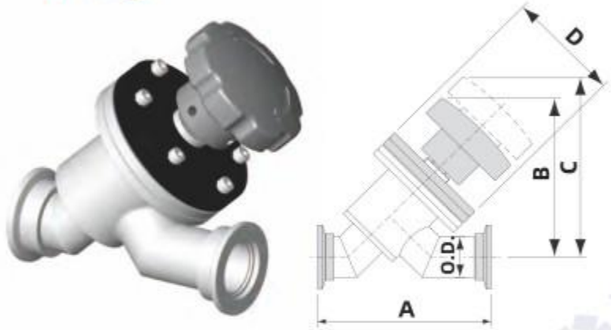

Features

- Stainless steel body surface treatment : below 4" puff polishing
- 3/4~2 inch(19.05~50.8mm) port ODs.
- Bakeable to 150°C
- Metal Seal Bonnet : 10^{-9} mbar vacuum rating KF flange

Available Area : U.S.A.

Model No.	A"(mm)	B"(mm)	C"(mm)	D"(mm)	O.D. "(mm)	Parts No.
YVB-CU-KF16-M	4.00"(101.6)	3.88"(98.7)	4.76"(113.5)	2.75"(70)	0.75"(19.05)	304609010016
YVB-CU-KF25-M	4.20"(106.8)	3.92"(98.8)	4.44"(113.6)	2.75"(70)	1.00"(25.4)	304611010016
YVB-CU-KF40-M	5.12"(130)	5.01"(124.2)	5.87"(147.5)	3.37"(84.6)	1.50"(38.1)	304613010016
YVB-CU-KF50-M	7.00"(177.8)	5.30"(140.7)	6.55"(174.7)	4.47"(113.6)	2.00"(50.8)	304614010016

Note: Dimension in inch(mm) unless otherwise noted

Y-INLINE VALVE

Manually Operated Copper Seal Bonnet with Bellows

CF Flange

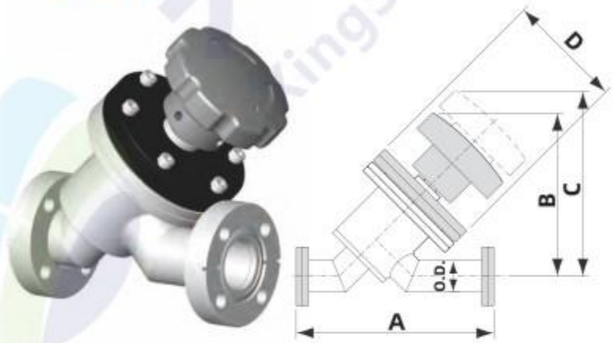

Features

- Stainless steel body surface treatment : below 4" puff polishing
- 3/4~2 inch(19.05~50.8mm) port ODs.
- Bakeable to 200°C(open),150°C(close)
- Metal Seal Bonnet : approximate 10^{-10} mbar vacuum rating CF flange

Available Area : U.S.A.

Model No.	A"(mm)	B"(mm)	C"(mm)	D"(mm)	O.D. "(mm)	Parts No.
YVB-CU-CR16-M	4.7"(119.4)	3.88"(98.7)	4.76"(113.5)	2.75"(70)	0.75"(19.05)	304609030016
YVB-CU-CR35-M	5.24"(133)	5.01"(124.2)	5.87"(147.5)	3.37"(84.6)	1.50"(38.1)	304613030016

Note: Dimension in inch(mm) unless otherwise noted

Dimension in mm unless otherwise noted
All information contained herein was current at time of publication, we reserve the right to change the design/specification for products improvement without notice.

Y-INLINE VALVE

Pneumatically Actuated with Bellows

Single-Acting, air to open, spring to close

KF Flange

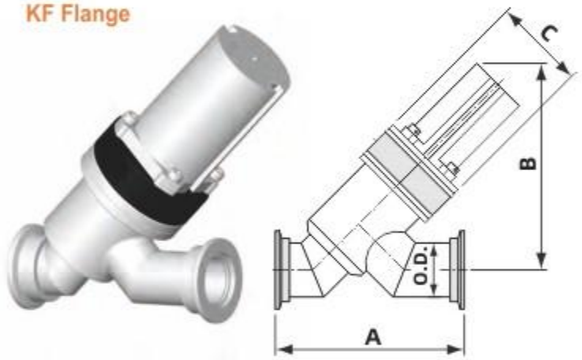

Features

- Stainless steel body surface treatment : below 4" puff polishing
- 3/4~2 inch(19.05~50.8mm) port ODs.
- 4~6.5 kg/cm^2 operating air pressure.
- Viton Seal Bonnet : 10^{-9} mbar vacuum rating KF flange

Available Area : U.S.A.

Model No.	A"(mm)	B"(mm)	C"(mm)	D"(mm)	Parts No.
YVB-KF16-P	4.73"(120)	4.73"(120)	2.24"(56.8)	0.75"(19.05)	304109110016
YVB-KF25-P	4.73"(120)	4.73"(120)	2.24"(56.8)	1.00"(25.4)	304111110016
YVB-KF40-P	6.17"(156.8)	6.17"(156.8)	2.98"(75.8)	1.50"(38.1)	304113110016
YVB-KF50-P	7.43"(188.8)	7.43"(188.8)	3.48"(88.4)	2.00"(50.8)	304114110016

Note: Dimension in inch(mm) unless otherwise noted

Y-INLINE VALVE

Pneumatically Actuated with Bellows

Single-Acting, air to open, spring to close

CF Flange

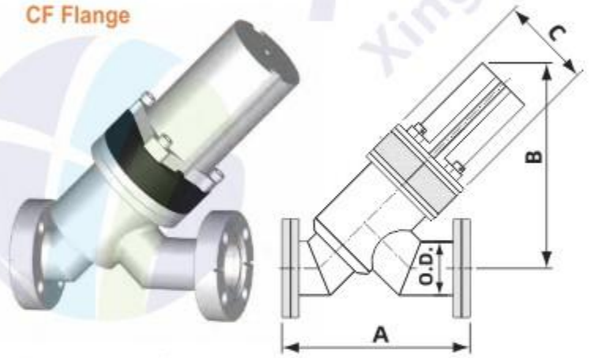

Features

- Stainless steel body surface treatment : below 4" puff polishing
- 3/4~2 inch(19.05~50.8mm) port ODs.
- 4~6.5 kg/cm^2 operating air pressure.
- Viton Seal Bonnet : 10^{-9} mbar vacuum rating CF flange

Available Area : U.S.A.

Model No.	A"(mm)	B"(mm)	C"(mm)	D"(mm)	Parts No.
YVB-CR16-P	4.70"(119.4)	4.73"(120)	2.24"(56.8)	0.75"(19.05)	304109130016
YVB-CR35-P	5.24"(133)	6.17"(156.8)	2.98"(75.8)	1.50"(38.1)	304113130016

Note: Dimension in inch(mm) unless otherwise noted

Dimension in mm unless otherwise noted
All information contained herein was current at time of publication, we reserve the right to change the design/specification for products improvement without notice.

兴生机械科技
XingSheng Machinery Technology

Y-INLINE VALVE

Pneumatically Actuated with Bellows Attached Reed Sensor

Single-Acting, air to open, spring to close

KF Flange

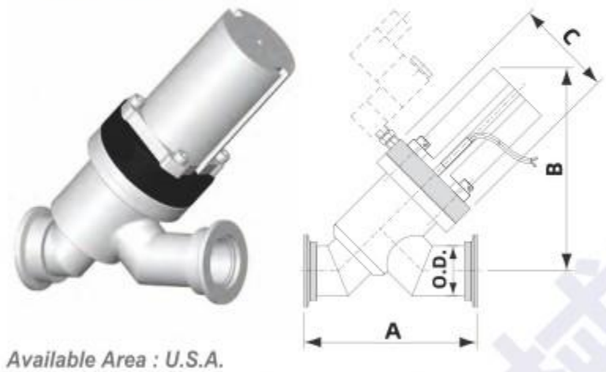

Features

- Stainless steel body surface treatment : below 4" puff polishing
- 3/4~2 inch(19.05~50.8mm) port ODs.
- 4~6.5 kg/cm^2 operating air pressure.
- Sensor Specification : Voltage DC /AC 4~240V Amps : 5~40mA.
- Options Available : Air solenoid DC24V, AC24V, AC110V, AC220V.
- Viton Seal Bonnet : 10^{-9} mbar vacuum rating KF flange

Available Area : U.S.A.

Model No.	A"(mm)	B"(mm)	C"(mm)	D"(mm)	Parts No.
YVBS-KF16-P	4.00"(101.6)	4.73"(120)	2.24"(56.8)	0.75"(19.05)	304109110216
YVBS-KF25-P	4.20"(106.8)	4.73"(120)	2.24"(56.8)	1.00"(25.4)	304111110216
YVBS-KF40-P	5.12"(130)	6.17"(156.8)	2.98"(75.8)	1.50"(38.1)	304113110216
YVBS-KF50-P	7.00"(177.8)	7.43"(188.8)	3.48"(88.4)	2.00"(50.8)	304114110216

Note: Dimension in inch(mm) unless otherwise noted

Y-INLINE VALVE

Pneumatically Actuated with Bellows Attached Reed Sensor

Single-Acting, air to open, spring to close

CF Flange

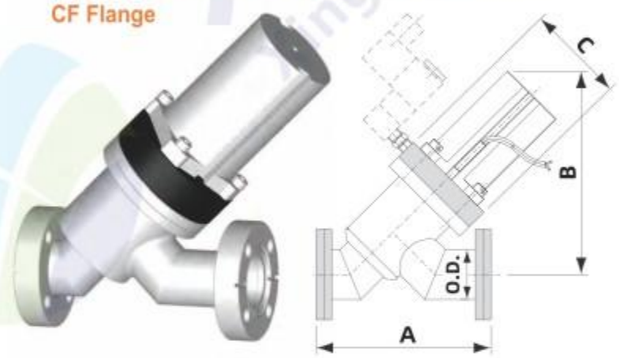

Features

- Stainless steel body surface treatment : below 4" puff polishing
- 3/4~2 inch(19.05~50.8mm) port ODs.
- 4~6.5 kg/cm^2 operating air pressure.
- Sensor Specification : Voltage DC /AC 4~240V Amps : 5~40mA.
- Options Available : Air solenoid DC24V, AC24V, AC110V, AC220V.
- Viton Seal Bonnet : 10^{-9} mbar vacuum rating CF flange

Available Area : U.S.A.

Model No.	A"(mm)	B"(mm)	C"(mm)	D"(mm)	Parts No.
YVBS-CR16-P	4.70"(119.4)	4.73"(120)	2.24"(56.8)	0.75"(19.05)	304109130216
YVBS-CR35-P	5.24"(133)	6.17"(156.8)	2.98"(75.8)	1.50"(38.1)	304113130216

Note: Dimension in inch(mm) unless otherwise noted

Dimension in mm unless otherwise noted
All information contained herein was current at time of publication, we reserve the right to change the design/specification for products improvement without notice.

Z-INLINE VALVE

Manually Operated with Bellows

KF Flange

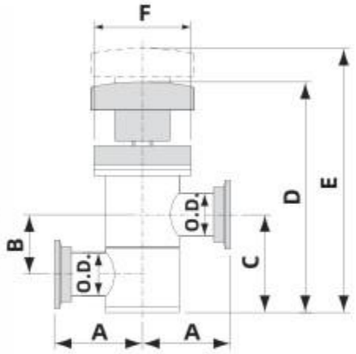

Features

- Stainless steel body surface treatment : below 4" puff polishing
- 3/4~2 inch(19.05~50.8mm) port ODs.
- Viton Seal Bonnet : 10^{-9} mbar vacuum rating KF flange

Available Area : U.S.A.

Model No.	A"(mm)	B"(mm)	C"(mm)	D"(mm)	E"(mm)	F"(mm)	O.D."(mm)	Parts No.
IVB-KF16-M	2.15"(54.6)	1.13"(28.5)	1.87"(47.5)	5.09"(129.4)	5.86"(148.9)	2.24"(56.8)	0.75"(19.05)	302109010016
IVB-KF25-M	2.03"(51.6)	1.37"(34.8)	2.25"(57.2)	5.35"(135.8)	6.11"(155.3)	2.24"(56.8)	1.00"(25.4)	302111010016
IVB-KF40-M	2.40"(61)	1.88"(47.8)	3.12"(79.3)	7.16"(181.8)	8.44"(214.3)	2.98"(75.8)	1.50"(38.1)	302113010016
IVB-KF50-M	3.40"(86.3)	2.62"(66.5)	4.12"(104.6)	8.85"(224.8)	10.61"(269.5)	3.48"(88.4)	2.00"(50.8)	302114010016

Note: Dimension in inch(mm) unless otherwise noted

Z-INLINE VALVE

Manually Operated with Bellows

CF Flange

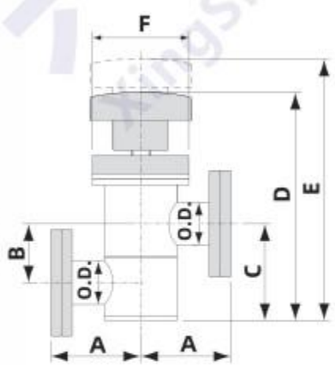

Features

- Stainless steel body surface treatment : below 4" puff polishing
- 3/4~2 inch(19.05~50.8mm) port ODs.
- Viton Seal Bonnet : 10^{-9} mbar vacuum rating CF flange

Available Area : U.S.A.

Model No.	A"(mm)	B"(mm)	C"(mm)	D"(mm)	E"(mm)	F"(mm)	O.D."(mm)	Parts No.
IVB-CR16-M	2.50"(63.5)	1.13"(28.6)	1.87"(47.6)	5.09"(129.6)	5.86"(149.1)	2.24"(56.8)	0.75"(19.05)	302109030016
IVB-CR35-M	2.46"(62.5)	1.88"(47.8)	3.12"(79.3)	7.16"(181.8)	8.44"(214.3)	2.98"(75.8)	1.50"(38.1)	302113030016

Note: Dimension in inch(mm) unless otherwise noted

Dimension in mm unless otherwise noted
All information contained herein was current at time of publication, we reserve the right to change the design/specification for products improvement without notice.

兴生机械科技
XingSheng Machinery Technology

06 VACUUM VALVE

Z-INLINE VALVE

Manually Operated without Bellows

KF Flange

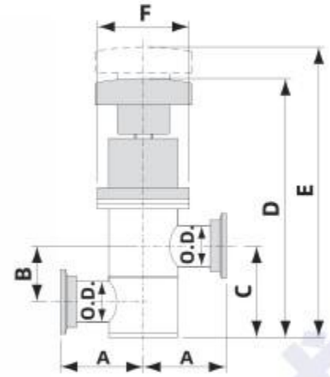

Features

- Stainless steel body surface treatment : below 4" puff polishing
- 3/4~2 inch(19.05~50.8mm) port ODs.
- Viton Seal Bonnet : 10^{-9} mbar vacuum rating KF flange

Available Area : U.S.A.

Model No.	A"(mm)	B"(mm)	C"(mm)	D"(mm)	E"(mm)	F"(mm)	O.D."(mm)	Parts No.
IV-KF16-M	2.15"(54.6)	1.13"(28.5)	1.87"(47.5)	6.32"(160.6)	6.94"(176.4)	2.24"(56.8)	0.75"(19.05)	302109010010
IV-KF25-M	2.03"(51.6)	1.37"(34.8)	2.25"(57.2)	6.57"(166.8)	7.19"(182.6)	2.24"(56.8)	1.00"(25.4)	302111010010
IV-KF40-M	2.40"(61)	1.88"(47.8)	3.12"(79.3)	8.22"(208.8)	9.32"(236.8)	2.98"(75.8)	1.50"(38.1)	302113010010
IV-KF50-M	3.40"(86.3)	2.62"(66.5)	4.12"(104.6)	10.53"(267.4)	12.12"(310)	3.48"(88.4)	2.00"(50.8)	302114010010

Note: Dimension in inch(mm) unless otherwise noted

Z-INLINE VALVE

Manually Operated without Bellows

CF Flange

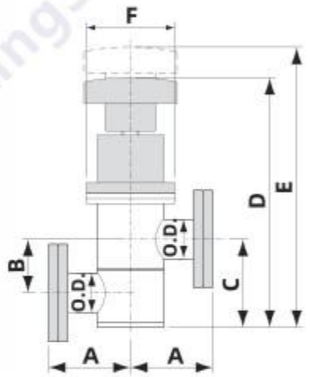

Features

- Stainless steel body surface treatment : below 4" puff polishing
- 3/4~2 inch(19.05~50.8mm) port ODs.
- Viton Seal Bonnet : 10^{-9} mbar vacuum rating CF flange

Available Area : U.S.A.

Model No.	A"(mm)	B"(mm)	C"(mm)	D"(mm)	E"(mm)	F"(mm)	O.D."(mm)	Parts No.
IV-CR16-M	2.50"(63.5)	1.13"(28.6)	1.87"(47.6)	6.32"(160.6)	6.94"(176.4)	2.24"(56.8)	0.75"(19.05)	302109030010
IV-CR35-M	2.46"(62.5)	1.88"(47.8)	3.12"(79.3)	8.22"(208.8)	9.32"(236.8)	2.98"(75.8)	1.50"(38.1)	302113030010

Note: Dimension in inch(mm) unless otherwise noted

Dimension in mm unless otherwise noted
All information contained herein was current at time of publication, we reserve the right to change the design/specification for products improvement without notice.

Z-INLINE VALVE

Manually Operated Copper Seal Bonnet with Bellows

KF Flange

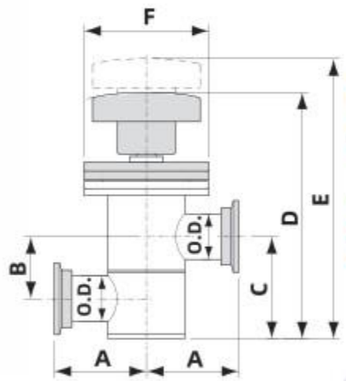

Features

- Stainless steel body surface treatment : below 4" puff polishing
- 3/4~2 inch(19.05~50.8mm) port ODs.
- Bakeable to 150°C
- Metal Bonnet : 10^{-9} mbar vacuum rating KF flange

Available Area : U.S.A.

Model No.	A"(mm)	B"(mm)	C"(mm)	D"(mm)	E"(mm)	F"(mm)	O.D."(mm)	Parts No.
IVB-CU-KF16-M	2.15"(54.6)	1.12"(28.5)	1.87"(47.5)	5.07"(129.6)	5.86"(150.5)	2.75"(70)	0.75"(19.05)	302609010016
IVB-CU-KF25-M	2.03"(51.6)	1.37"(34.8)	2.25"(57.2)	5.33"(135.8)	6.11"(156.7)	2.75"(70)	1.00"(25.4)	302611010016
IVB-CU-KF40-M	2.40"(61)	1.88"(47.8)	3.12"(79.3)	7.35"(181.8)	8.57"(214.8)	3.37"(84.6)	1.50"(38.1)	302613010016
IVB-CU-KF50-M	3.40"(86.3)	2.62"(66.5)	4.12"(104.6)	8.86"(225.3)	10.63"(271.2)	4.17"(113.6)	2.00"(50.8)	302614010016

Note: Dimension in inch(mm) unless otherwise noted

Z-INLINE VALVE

Manually Operated Copper Seal Bonnet with Bellows

CF Flange

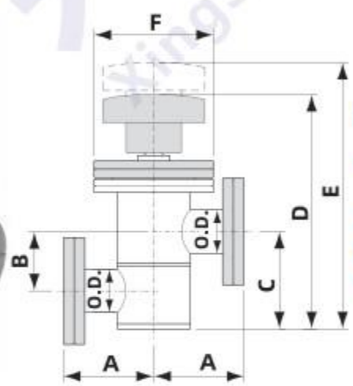

Features

- Stainless steel body surface treatment : below 4" puff polishing
- 3/4~2 inch(19.05~50.8mm) port ODs.
- Bakeable to 200°C(open),150°C(close)
- Metal Bonnet : approximate 10^{-10} mbar vacuum rating CF flange

Available Area : U.S.A.

Model No.	A"(mm)	B"(mm)	C"(mm)	D"(mm)	E"(mm)	F"(mm)	O.D."(mm)	Parts No.
IVB-CU-CR16-M	2.50"(63.5)	1.12"(28.5)	1.87"(47.5)	5.07"(129.6)	5.85"(150.5)	2.75"(70)	0.75"(19.05)	302609030016
IVB-CU-CR35-M	2.45"(62.5)	1.88"(47.8)	3.12"(79.3)	7.35"(181.8)	8.57"(214.8)	3.37"(84.6)	1.50"(38.1)	302613030016

Note: Dimension in inch(mm) unless otherwise noted

Dimension in mm unless otherwise noted
All information contained herein was current at time of publication, we reserve the right to change the design/specification for products improvement without notice.

兴生机械科技
XingSheng Machinery Technology

06 VACUUM VALVE

Z-INLINE VALVE

Pneumatically Actuated with Bellows

Single-Acting, air to open, spring to close

KF Flange

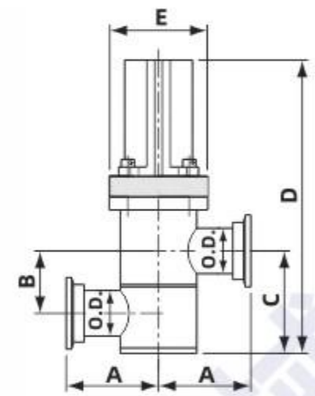

Features

- Stainless steel body surface treatment : below 4" puff polishing
- 3/4~2 inch(19.05~50.8mm) port ODs.
- 4~6.5 kg/cm^2 operating air pressure.
- Viton Seal Bonnet : 10^{-9} mbar vacuum rating KF flange

Available Area : U.S.A.

Model No.	A"(mm)	B"(mm)	C"(mm)	D"(mm)	E"(mm)	O.D."	Parts No.
IVB-KF16-P	2.15"(54.6)	1.13"(28.5)	1.87"(47.5)	5.90"(149.7)	2.24"(56.8)	0.75"(19.05)	302109110016
IVB-KF25-P	2.03"(51.6)	1.37"(34.8)	2.25"(57.2)	6.14"(156)	2.24"(56.8)	1.00"(25.4)	302111110016
IVB-KF40-P	2.40"(61)	1.88"(47.8)	3.12"(79.3)	8.56"(217.3)	2.98"(75.8)	1.50"(38.1)	302113110016
IVB-KF50-P	3.40"(86.3)	2.62"(66.5)	4.12"(104.6)	11.05"(280.7)	3.48"(88.4)	2.00"(50.8)	302114110016

Note: Dimension in inch(mm) unless otherwise noted

Z-INLINE VALVE

Pneumatically Actuated with Bellows

Single-Acting, air to open, spring to close

CF Flange

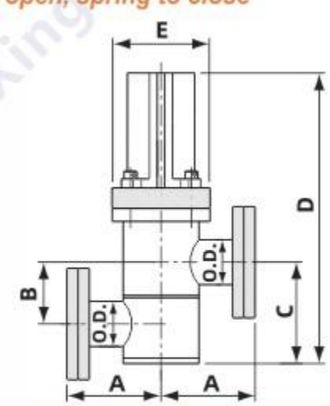

Features

- Stainless steel body surface treatment : below 4" puff polishing
- 3/4~2 inch(19.05~50.8mm) port ODs.
- 4~6.5 kg/cm^2 operating air pressure.
- Viton Seal Bonnet : 10^{-9} mbar vacuum rating CF flange

Available Area : U.S.A.

Model No.	A"(mm)	B"(mm)	C"(mm)	D"(mm)	E"(mm)	O.D."	Parts No.
IVB-CR16-P	2.50"(63.5)	1.13"(28.6)	1.87"(47.6)	5.90"(149.7)	2.24"(56.8)	0.75"(19.05)	302109130016
IVB-CR35-P	2.46"(62.5)	1.88"(47.8)	3.12"(79.3)	8.56"(217.3)	2.98"(75.8)	1.50"(38.1)	302113130016

Note: Dimension in inch(mm) unless otherwise noted

Dimension in mm unless otherwise noted
All information contained herein was current at time of publication, we reserve the right to change the design/specification for products improvement without notice.

Z-INLINE VALVE

Pneumatically Actuated without Bellows

Single-Acting, air to open, spring to close

KF Flange

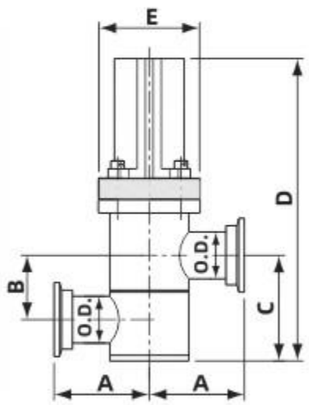

Features

- Stainless steel body surface treatment : below 4" puff polishing
- 3/4~2 inch(19.05~50.8mm) port ODs.
- 4~6.5 kg/cm^2 operating air pressure.
- Viton Seal Bonnet : 10^{-9} mbar vacuum rating KF flange

Available Area : U.S.A.

Model No.	A"(mm)	B"(mm)	C"(mm)	D"(mm)	E"(mm)	O.D."	Parts No.
IV-KF16-P	2.15"(54.6)	1.13"(28.5)	1.87"(47.5)	5.90"(149.7)	2.24"(56.8)	0.75"(19.05)	302109110010
IV-KF25-P	2.03"(51.6)	1.37"(34.8)	2.25"(57.2)	6.14"(156)	2.24"(56.8)	1.00"(25.4)	302111110010
IV-KF40-P	2.40"(61)	1.88"(47.8)	3.12"(79.3)	8.56"(217.1)	2.98"(75.8)	1.50"(38.1)	302113110010
IV-KF50-P	3.40"(86.3)	2.62"(66.5)	4.12"(104.6)	11.05"(280.7)	3.48"(88.4)	2.00"(50.8)	302114110010

Note: Dimension in inch(mm) unless otherwise noted

Z-INLINE VALVE

Pneumatically Actuated with Bellows Attached Reed Sensor

Single-Acting, air to open, spring to close

KF Flange

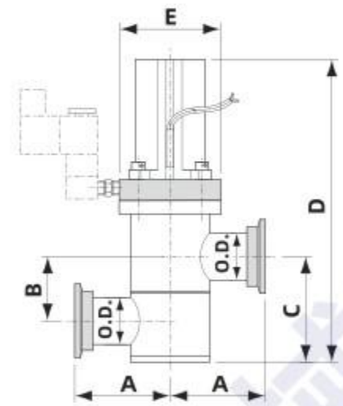

Features

- Stainless steel body surface treatment : below 4" puff polishing
- 3/4~2 inch(19.05~50.8mm) port ODs.
- 4~6.5 kg/cm^2 operating air pressure.
- Sensor Specification : Voltage DC/AC 4~240V Amps : 5~40mA.
- Options Available : Air solenoid DC24V, AC24V, AC110V, AC220V.
- Viton Seal Bonnet : 10^{-9} mbar vacuum rating KF flange

Available Area : U.S.A.

Model No.	A"(mm)	B"(mm)	C"(mm)	D"(mm)	E"(mm)	O.D."	Parts No.
IVBS-KF16-P	2.15"(54.6)	1.13"(28.5)	1.87"(47.5)	6.51"(165.2)	2.24"(56.8)	0.75"(19.05)	302109110216
IVBS-KF25-P	2.03"(51.6)	1.37"(34.8)	2.25"(57.2)	6.75"(171.5)	2.24"(56.8)	1.00"(25.4)	302111110216
IVBS-KF40-P	2.40"(61)	1.88"(47.8)	3.12"(79.3)	8.90"(228.5)	2.98"(75.8)	1.50"(38.1)	302113110216
IVBS-KF50-P	3.40"(86.3)	2.62"(66.5)	4.12"(104.3)	11.26"(285.9)	3.48"(88.4)	2.00"(50.8)	302114110216

Note: Dimension in inch(mm) unless otherwise noted

Z-INLINE VALVE

Pneumatically Actuated without Bellows

Single-Acting, air to open, spring to close

CF Flange

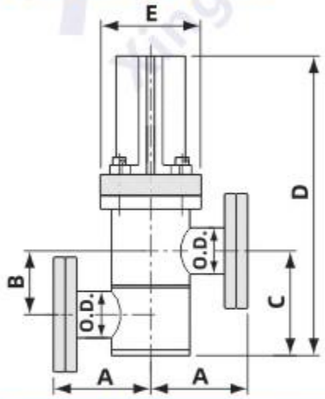

Features

- Stainless steel body surface treatment : below 4" puff polishing
- 3/4~2 inch(19.05~50.8mm) port ODs.
- 4~6.5 kg/cm^2 operating air pressure.
- Viton Seal Bonnet : 10^{-9} mbar vacuum rating CF flange

Available Area : U.S.A.

Model No.	A"(mm)	B"(mm)	C"(mm)	D"(mm)	E"(mm)	O.D."	Parts No.
IV-CR16-P	2.50"(63.5)	1.13"(28.6)	1.87"(47.6)	5.90"(149.7)	2.24"(56.8)	0.75"(19.05)	302109130010
IV-CR35-P	2.46"(62.5)	1.88"(47.8)	3.12"(79.3)	8.56"(217.3)	2.98"(75.8)	1.50"(38.1)	302113130010

Note: Dimension in inch(mm) unless otherwise noted

Z-INLINE VALVE

Pneumatically Actuated with Bellows Attached Reed Sensor

Single-Acting, air to open, spring to close

CF Flange

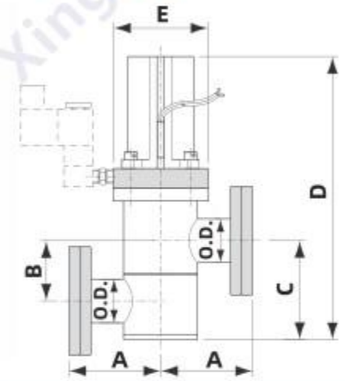

Features

- Stainless steel body surface treatment : below 4" puff polishing
- 3/4~2 inch(19.05~50.8mm) port ODs.
- 4~6.5 kg/cm^2 operating air pressure.
- Sensor Specification : Voltage DC/AC 4~240V Amps : 5~40mA
- Options Available : Air solenoid DC24V, AC24V, AC110V, AC220V.
- Viton Seal Bonnet : 10^{-9} mbar vacuum rating CF flange

Available Area : U.S.A.

Model No.	A"(mm)	B"(mm)	C"(mm)	D"(mm)	E"(mm)	O.D."	Parts No.
IVBS-CR16-P	2.50"(63.5)	1.13"(28.6)	1.87"(47.6)	6.51"(165.2)	2.24"(56.8)	0.75"(19.05)	302109130216
IVBS-CR35-P	2.46"(62.5)	1.88"(47.8)	3.12"(79.3)	8.90"(228.5)	2.98"(75.8)	1.50"(38.1)	302113130216

Note: Dimension in inch(mm) unless otherwise noted

Dimension in mm unless otherwise noted
All information contained herein was current at time of publication, we reserve the right to change the design/specification for products improvement without notice.

Dimension in mm unless otherwise noted
All information contained herein was current at time of publication, we reserve the right to change the design/specification for products improvement without notice.

FORMED BELLOWS SEAL STAINLESS VALVE

Single-Acting, air to open, spring to close

Angle Valve

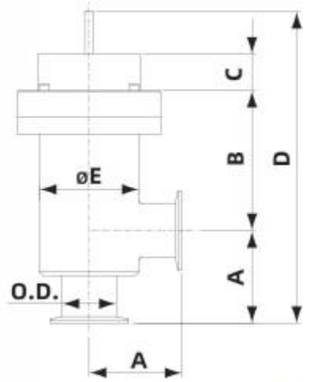

Features

- Polished 304 stainless steel body.
- Operating pressure : 4~6 kg/cm^2
- Orientation : Any position
- Viton Seal Bonnet : 10^{-9} mbar vacuum rating KF flange

Parts No.	A	B	C	D	E	O.D.
ZFP0081520040K00	65	99.5	25.5	214.3	76.2	38.1(1.50")

FORMED BELLOWS SEAL STAINLESS VALVE

Single-Acting, air to open, spring to close

Y-inline Valve

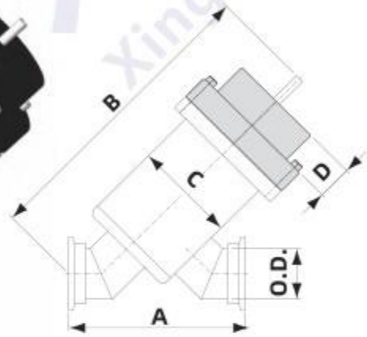

Features

- Polished 304 stainless steel body.
- Operating pressure : 4~6 kg/cm^2
- Orientation : Any position
- Viton Seal Bonnet : 10^{-9} mbar vacuum rating KF flange

Parts No.	A	B	C	D	O.D.
ZFP0081620040K00	130	224	76.2	25.5	38.1(1.50")

Dimension in mm unless otherwise noted

All information contained herein was current at time of publication, we reserve the right to change the design/specification for products improvement without notice.

兴生机械科技
XingSheng Machinery Technology

06 VACUUM VALVE

FORMED BELLOWS SEAL STAINLESS VALVE

Single-Acting, air to open, spring to close

Two-Stage Valve

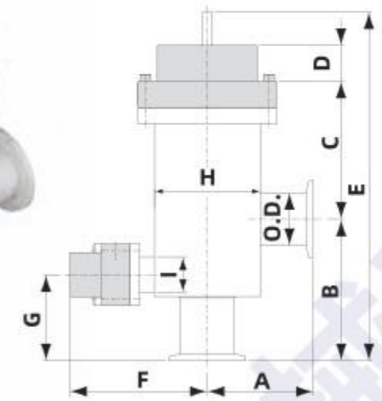

Features

- Polished 304 stainless steel body.
- Operating pressure : 4~6 kg/cm^2
- Orientation : Any position
- Viton Seal Bonnet : 10^{-9} mbar vacuum rating KF flange
- Provides soft pumpdown and isolation for vacuum system
- Reduces particulate contamination during early turbulent pumpdown.

Parts No.	A	B	C	D	E	F	G	H	I	O.D.
ZFP008V2040AK00	76.2	102	99.5	25.5	251.3	99	62	76.2	25.4	38.1(1.50")

Dimension in mm unless otherwise noted

All information contained herein was current at time of publication, we reserve the right to change the design/specification for products improvement without notice.

HV Aluminum Block Valve

Features

- Twin micro switches in Htc standard All-in-one valve.
- Reed sensor or Micro switch is available upon request for HV type.
- Available in aluminum or stainless steel valve body.
- Non-magnetic aluminum 6061-T6 valve body.
- Visible position indicator on the top of valve.
- Electrical and visual (LED) position indication.
- Selectable operating mode
- Remote control via PLC or PC
- Local operation
- Easy maintenance, fast bellows and seal replacement.
- Fast opening and closing time.

Advantages

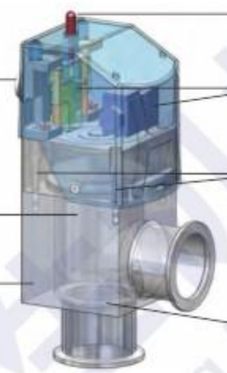

A.I.O. : Easy to plug & play

Htc All-in-one Type

Quick connector for solenid & micro switches

General Type

Solenoid & reed sensor installed on the back of valve, 6 wires need to be connected

Photos of various applications

Venting with filter

Gas Isolation

Process gas control

Specification:

Pilot valve Naminal voltage Power DC voltage AC voltage Nominal diameter	Product nameplate 2.4W 3.6VA 1.2mm		
Electrical position indicator Connection Rating	 Soldered joints 125 VAC/1A 30 VDC/0.5A		
Vacuum connection	KF16	KF25	KF40
Actuation	opening : pneumatic closing : by pressure spring		
Compressed air supply Tube connection Pressure range Piston displacement	 Ø6 mm 4~6 Kg/cm^2(overpressure) 4 cm^3	 11 cm^3	 35 cm^3
Stroke of valve plate	6 mm	8 mm	13 mm
Conductance Angle valve	5 l/s	14 l/s	45 l/s
Switching frequency Opening time Closing time	100/min 100ms 100ms	100/min 120ms 160ms	75/min 260ms 540ms
Cycle life	10 million		
Leak Rate	1x10^{-9} mbar.l/s		
Pressure max.	5 bar(absolute)		
Operating pressure min.	1x10^{-8} mbar		
Operating pressure max.	2 bar		
Pressure difference ΔP In closing direction In opening direction	 5 bar 2 bar		
Temperature Ambiance Bakeout Housing Aluminum Actuator Pilot valve	 0°C...+50°C 80°C 50°C 50°C		
Mounting orientation Flow direction	Any Any		
Materials Housing Aluminum Bellows/valve plate Pressure spring Seals Cover Visual position indicator Cylinder unit	 A6061-T6 316Ti S.S. Spring steel Viton ABS A5083		
Weight All in one Aluminum Pneumatic N/C Aluminum	 0.54 kg 0.36kg	 0.73kg 0.56 kg	 1.34kg 1.2kg

Dimension in mm unless otherwise noted
All information contained herein was current at time of publication, we reserve the right to change the design/specification for products improvement without notice.

兴生机械科技
XingSheng Machinery Technology

06 VACUUM VALVE

Dimension in mm unless otherwise noted
All information contained herein was current at time of publication, we reserve the right to change the design/specification for products improvement without notice.

HV ALUMINUM ANGLE VALVE-Pneumatically Actuated

with formed bellows seal, Limit Switch

Single-Acting, air to open, spring to close

All in one type

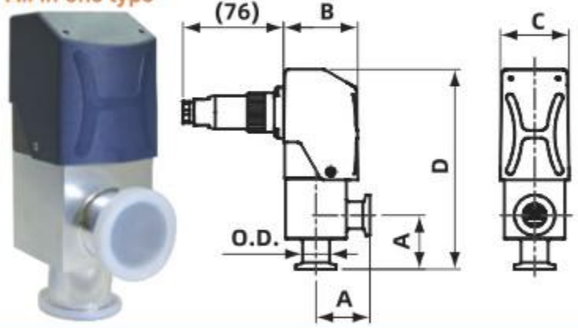

Features

- 10 million cycle 316Ti stainless steel bellows
- Easy maintenance, fast bellows and seal replacement
- Fast opening and closing time
- High purity aluminum body
- Leak rate: $1x10^{-9}$ mbar. l /sec
- Flange : KF(NW)

Model No.	A	B	C	D	O.D.	Parts No.
AVABHLS-KF16-P-E	40	55	51	148	20	31010911042MA
AVABHLS-KF25-P-E	50	65.5	60	153	28	31011111042MA
AVABHLS-KF40-P-E	65	81	75	201	45	31011311042MA

with formed bellows seal, Solenoid, Limit Switch

Single-Acting, air to open, spring to close

All in one type

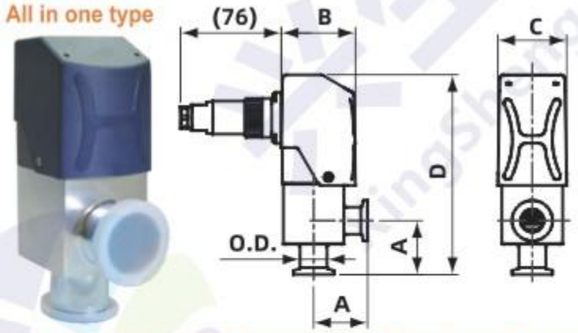

Features

- 10 million cycle 316Ti stainless steel bellows
- Easy maintenance, fast bellows and seal replacement
- Fast opening and closing time
- High purity aluminum body
- Leak rate: $1x10^{-9}$ mbar. l /sec
- Flange : KF(NW)

Model No.	A	B	C	D	O.D.
AVABHLSV-KF16-P-E	40	55	51	148	20
AVABHLSV-KF25-P-E	50	65.5	60	153	28
AVABHLSV-KF40-P-E	65	81	75	201	45

A.I.O Parts No.

Solenold	KF16	KF25	KF40
24V DC	31010911142MA	31011111142MA	31011311142MA
110V AC	31010911242MA	31011111242MA	31011311242MA
220V AC	31010911342MA	31011111342MA	31011311342MA
24V AC	31010911442MA	31011111442MA	31011311442MA

Dimension in mm unless otherwise noted

All information contained herein was current at time of publication, we reserve the right to change the design/specification for products improvement without notice.

兴生机械科技
XingSheng Machinery Technology

06 VACUUM VALVE

HV ALUMINUM ANGLE VALVE-Pneumatically Actuated

with formed bellows seal

Single-Acting, air to open, spring to close

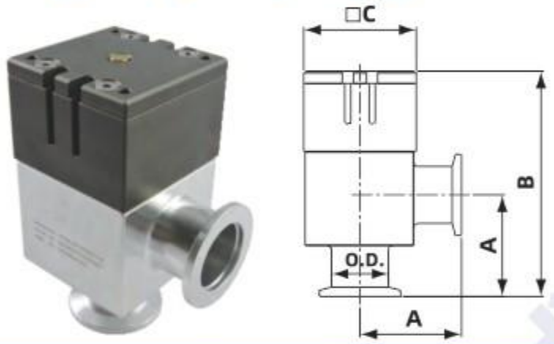

Features

- 10 million cycle 316Ti stainless steel bellows
- Easy maintenance, fast bellows and seal replacement
- Fast opening and closing time
- High purity aluminum body
- Leak rate: $1x10^{-9}$ mbar. l /sec
- Flange : KF(NW)

Model No.	A	B	C	O.D.	Parts No.
AVABH-KF16-P-E	40	102	46.4	20	31010911002MA
AVABH-KF25-P-E	50	111	55.4	28	31011111002MA
AVABH-KF40-P-E	65	153	70.4	45	31011311002MA

with formed bellows seal, Attached Reed Sensor

Single-Acting, air to open, spring to close

Features

- 10 million cycle 316Ti stainless steel bellows
- Easy maintenance, fast bellows and seal replacement
- Fast opening and closing time
- High purity aluminum body
- Leak rate: $1x10^{-9}$ mbar. l /sec
- Flange : KF(NW)

Model No.	A	B	C	O.D.	Parts No.
AVABHS-KF16-P-E	40	102	46.4	20	31010911022MA
AVABHS-KF25-P-E	50	111	55.4	28	31011111022MA
AVABHS-KF40-P-E	65	153	70.4	45	31011311022MA
AVABHS-KF50-P-E	70	165.2	77	55	31011411022MA

Dimension in mm unless otherwise noted

All information contained herein was current at time of publication, we reserve the right to change the design/specification for products improvement without notice.

HV ALUMINUM ANGLE VALVE-Pneumatically Actuated

with formed bellows seal, Attached Solenoid

Single-Acting, air to open, spring to close

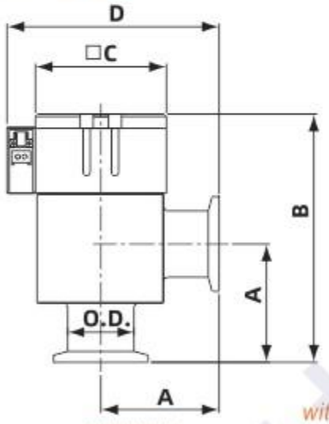

Features

- 10 million cycle 316Ti stainless steel bellows
- Easy maintenance, fast bellows and seal replacement
- Fast opening and closing time
- High purity aluminum body
- Leak rate: $1x10^{-9}$ mbar. l /sec
- Flange : KF(NW)

with standard voltage DC24V solenoid, With LN type connector without sensors, without limit switch

Model No.	A	B	C	O.D.	Parts No.
AVABHSV-KF16-P-E	40	102	46.4	20	31010911102MA
AVABHSV-KF25-P-E	50	111	55.4	28	31011111102MA
AVABHSV-KF40-P-E	65	153	70.4	45	31011311102MA

with formed bellows seal, Attached Reed Sensor

Double -Acting, air to open, air to close

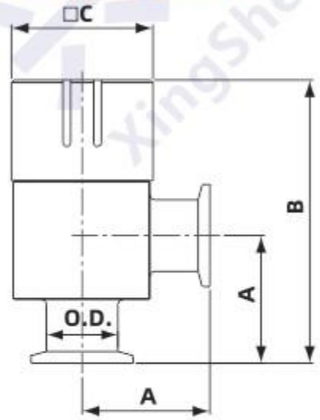

Features

- 10 million cycle 316Ti stainless steel bellows
- Easy maintenance, fast bellows and seal replacement
- Fast opening and closing time
- High purity aluminum body
- Leak rate: $1x10^{-9}$ mbar. l /sec
- Flange : KF(NW)

with reed sensor, without limit switch, without solenoid valve

Model No.	A	B	C	O.D.	Parts No.
AVABHS-KF16-P2-E	40	108.2	46.4	20	31010921022MA
AVABHS-KF25-P2-E	50	111	55.4	28	31011121022MA
AVABHS-KF40-P2-E	65	153.8	70.4	45	31011321022MA

Dimension in mm unless otherwise noted

All information contained herein was current at time of publication, we reserve the right to change the design/specification for products improvement without notice.

兴生机械科技 XingSheng Machinery Technology

06 VACUUM VALVE

Normally Open

with formed bellows seal, Attached Reed Sensor

Single-Acting, spring to open, air to close

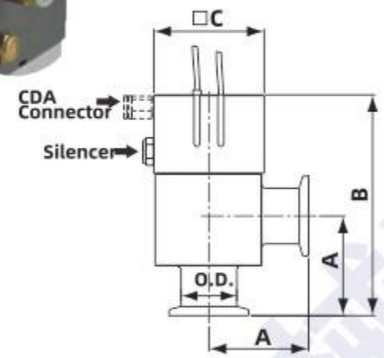

Features

- 10 million cycle 316Ti stainless steel bellows
- Easy maintenance, fast bellows and seal replacement
- Fast opening and closing time
- High purity aluminum body
- Leak rate: $1x10^{-9}$ mbar. l /sec
- Flange : KF(NW)

with reed sensors, without limit switch, without solenoid

Model No.	A	B	C	O.D.	Parts No.
AVABHS-KF16-P-NO-E	40	108.2	46.4	20	31010941022MA
AVABHS-KF25-P-NO-E	50	111	55.4	28	31011141022MA
AVABHS-KF40-P-NO-E	65	153.8	70.4	45	31011341022MA

with formed bellows seal, Attached Reed Sensor & Solenoid

Single -Acting, spring to open, air to close

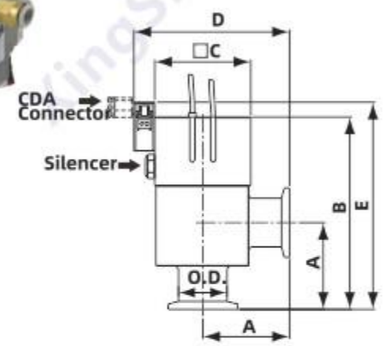

Features

- 10 million cycle 316Ti stainless steel bellows
- Easy maintenance, fast bellows and seal replacement
- Fast opening and closing time
- High purity aluminum body
- Leak rate: $1x10^{-9}$ mbar. l /sec
- Flange : KF(NW)

with reed sensors, with standard voltage DC24V solenoid, with LN type connector, without limit switch

Model No.	A	B	C	D	E	O.D.	Parts No.
AVABHSSV-KF16-P-NO-E	40	102	46.4	75	111	20	31010941122MA
AVABHSSV-KF25-P-NO-E	50	111	55.4	90	120	28	31011141122MA
AVABHSSV-KF40-P-NO-E	65	153	70.4	112	162	45	31011341122MA

Dimension in mm unless otherwise noted

All information contained herein was current at time of publication, we reserve the right to change the design/specification for products improvement without notice.

HV ALUMINUM ANGLE VALVE-Pneumatic Actuated

Without bellows seal, Normal close

Specification:

Electrical position indicator Connection Rating	AC 24 ~ 240 VAC 4~24VDC		
Vacuum connection	KF16	KF25	KF40
Actuation	opening : pneumatic closing : by pressure spring		
Compressed air supply Tube connection Pressure range Piston displacement	Ø6 mm 4~6 Kg/cm^2(overpressure)		
	4 cm^3	11 cm^3	35 cm^3
Stroke of valve plate	6 mm	8 mm	13 mm
Conductance Angle valve	5 l/s	14 l/s	45 l/s
Switching frequency Opening time Closing time	10/min 100ms 100ms	10/min 120ms 160ms	8/min 260ms 540ms
Cycle life	1,000,000		
Leak Rate	3x10^{-9} mbar.l/s		
Pressure max.	6 bar(absolute)		
Operating pressure min.	1x10^{-8} mbar		
Operating pressure max.	6 bar		
Pressure difference ΔP In closing direction In opening direction	6 bar 2 bar		
Temperature Ambiance Bakeout Housing Aluminum Actuator Pilot valve	0°C…+50°C 80°C 50°C 50°C		
Mounting orientation	Any		
Materials Housing Aluminum valve plate Pressure spring Seals Visual position indicator Cylinder unit	A6061-T6 316S.S. Spring steel Viton A5083		

Dimension in mm unless otherwise noted

All information contained herein was current at time of publication, we reserve the right to change the design/specification for products improvement without notice.

兴生机械科技 XingSheng Machinery Technology

06 VACUUM VALVE

HV ALUMINUM ANGLE VALVE-Pneumatically Actuated

without bellows seal

Single-Acting, Normal close

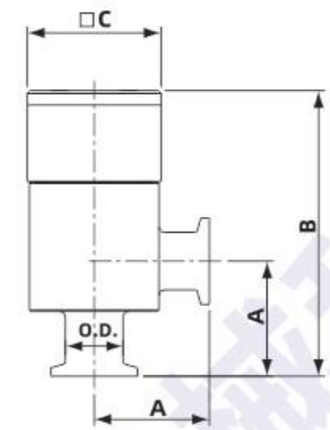

Features

- 10 million cycle o-ring seal
- Easy maintenance, seal replacement
- Fast opening and closing time
- High purity aluminum body
- Leak rate: 3x10^{-9} mbar. l /sec
- Flange : KF(NW)

Model No.	A	B	C	O.D.	Parts No.
AVAH-KF16-P-E	40	102	46.4	20	31010911002M0
AVAH-KF25-P-E	50	111	55.4	28	31011111002M0
AVAH-KF40-P-E	65	153	70.4	45	31011311002M0

without bellows seal, Attached Reed Sensor

Single-Acting, Normal close

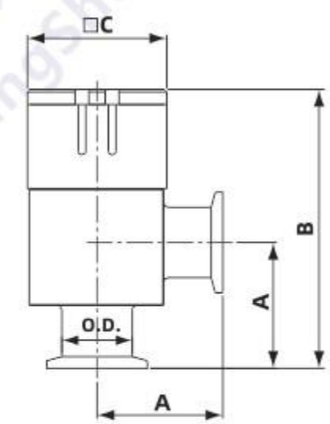

Features

- 10 million cycle o-ring seal
- Easy maintenance, seal replacement
- Fast opening and closing time
- High purity aluminum body
- Leak rate: 3x10^{-9} mbar. l /sec
- Flange : KF(NW)

Model No.	A	B	C	O.D.	Parts No.
AVAHS-KF16-P-E	40	102	46.4	20	31010911022M0
AVAHS-KF25-P-E	50	111	55.4	28	31011111022M0
AVAHS-KF40-P-E	65	153	70.4	45	31011311022M0

Dimension in mm unless otherwise noted

All information contained herein was current at time of publication, we reserve the right to change the design/specification for products improvement without notice.

Manual aluminum angle valve (with bellows)

Specification:

Vacuum connection Port	KF16	KF25	KF40
Actuation	Manual Actuator		
Stroke of valve plate	6 mm	8 mm	13 mm
Weight (Kg)	0.5	0.59	1.12
Conductance Angle valve	5 l/s	14 l/s	45 l/s
Cycles until first service (Tmax 80°C, under clean conditions)	20,000		
Leak Rate	$1x10^{-9}$ mbar.l/s		
Pressure Range.	$1x10^{-8}$ mbar ~5 bar (absolute)		
Pressure difference ΔP In closing direction In opening direction	5 bar 2 bar		
Temperature Ambiance Bakeout Housing Aluminum Actuator	0°C…+50°C 150°C 120°C		
Mounting orientation Flow direction	Any Any		
Materials Housing Aluminum Bellows/valve plate Seals	A6061-T6 316Ti S.S. Viton		

Dimension in mm unless otherwise noted

All information contained herein was current at time of publication, we reserve the right to change the design/specification for products improvement without notice.

兴生机械科技 XingSheng Machinery Technology

06 VACUUM VALVE

HV ALUMINUM ANGLE VALVE-Manual Operated

with-formed bellows

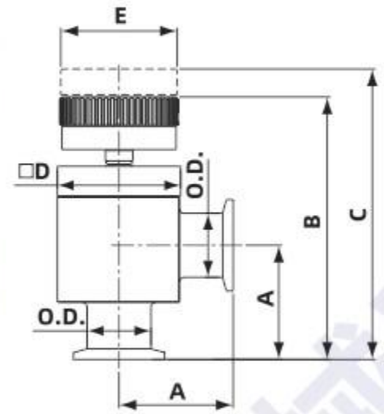

Features

- 316Ti stainless steel bellows
- Easy maintenance,
  fast bellows and seal replacement
- High purity aluminum body
- Leak rate: $1x10^{-9}$ mbar. l /sec
- Flange : KF(NW)

Model No.	A	B	C	D	E	O.D.	Parts No.
AVABH-KF16-M-E	40	103	107	45	52	20	31010901002MA
AVABH-KF25-M-E	50	110	115	54	52	28	31011101002MA
AVABH-KF40-M-E	65	148	157	70	62	45	31011301002MA

without formed bellows

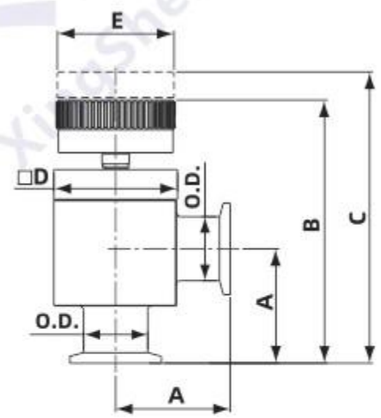

Features

- High purity aluminum body
- Leak rate: $1x10^{-9}$ mbar. l /sec
- Flange : KF(NW)

Model No.	A	B	C	D	E	O.D.	Parts No.
AVAH-KF16-M-E	40	105	110	45	52	20	31010901002M0
AVAH-KF25-M-E	50	110	115	54	52	28	31011101002M0
AVAH-KF40-M-E	65	150	157	70	62	45	31011301002M0

Dimension in mm unless otherwise noted

All information contained herein was current at time of publication, we reserve the right to change the design/specification for products improvement without notice.

Butterfly valve

BUTTERFLY VALVES

Butterfly valve is a valve which can be used for isolating or regulating flow. The closing mechanism takes the form of a disk. Operation is similar to that of a ball valve, which allows for quick shut off. Butterfly valves are generally favored because they are lighter in weight, meaning less support is required.

Htc vacuum provides various butterfly valves which features long service life, high quality and high performance, the robust and rugged design can be relied upon for years of trouble free service. There are manual, pneumatic and electric actuators butterfly valve available for different applications. One thing should be aware is that when the butterfly valve is fully open and the disk is protrusive from the valve body, the disk might interfere the inner surface of the connecting duct, users should check the minimum ID of connecting duct before installation.

Pneumatic butterfly valve

Main applications
Compact isolation valve for clean processes.

Application process
FPD SEMI PVD

Pneumatic butterfly valve-gate system settings

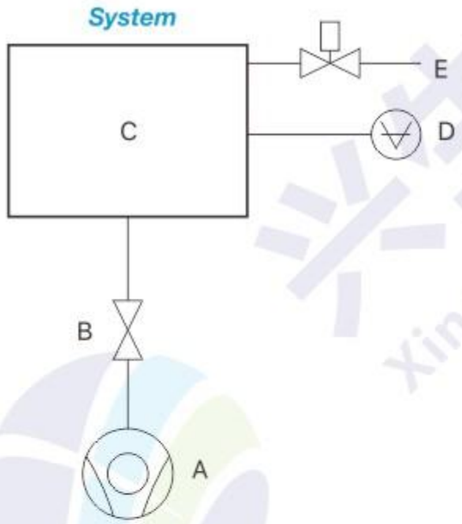

A : Pump
B : Htc pneumatic butterfly valve
C : Process chamber
D : Gauge
E : Gas inlet

Application

Htc Pneumatic butterfly valve is driven by rotating cylinder valve. The seal plate compacts O-ring isolated from the vacuum and atmosphere completely. Htc Pneumatic butterfly valve has advantages as quick opening and closing, easy installation, small size and long life cycles. Main application of Htc Pneumatic butterfly valve will be fully isolated contaminating and aggressive gas in processes. And the valve is located between pump and process chamber.

Dimension in mm unless otherwise noted
All information contained herein was current at time of publication, we reserve the right to change the design/specification for products improvement without notice.

兴生机械科技
XingSheng Machinery Technology

06 VACUUM VALVE

Pneumatic Butterfly valve

Specification:

Material	Body		304 S.S.
	Plate		304 S.S.
	Shaft		304 S.S.
	Gate seal		Viton
	Shaft seal		Viton
Mounting orientation			Any
Cycles life	cycles	KF25 - KF50	1,500,000
		ISO63 - ISO160	1,500,000
		ISO200 - ISO250	1,000,000
Cycles life for plate o-ring	cycles	KF25 - KF50	250,000
		ISO63 - ISO160	250,000
		ISO200 - ISO250	200,000
Helium leak rate at 1 atm differential	mbar-Liter/sec		$< 1 \times 10^{-9}$
Pressure range in either direction			1×10^{-8} mbar to 2 bar
Differential pressure ΔP in either directio			≤ 2 bar
Maximum differential pressure during opening			< 1.2 bar
Compressed air connection			2x 1/4"NPT
Compressed air pressure			4 ~ 6 bar
Weight	KF25		1.3 kg
	KF40		2.3 kg
	KF50		2.6 kg
	ISO63		4.2 kg
	ISO100		5.2 kg
	ISO160		9.8 kg
	ISO200		17.8 kg
	ISO250		15.1 kg

Dimension in mm unless otherwise noted
All information contained herein was current at time of publication, we reserve the right to change the design/specification for products improvement without notice.

BUTTERFLY VALVE (ISO-KF TYPE)

Pneumatically Actuated

air to open, air to close

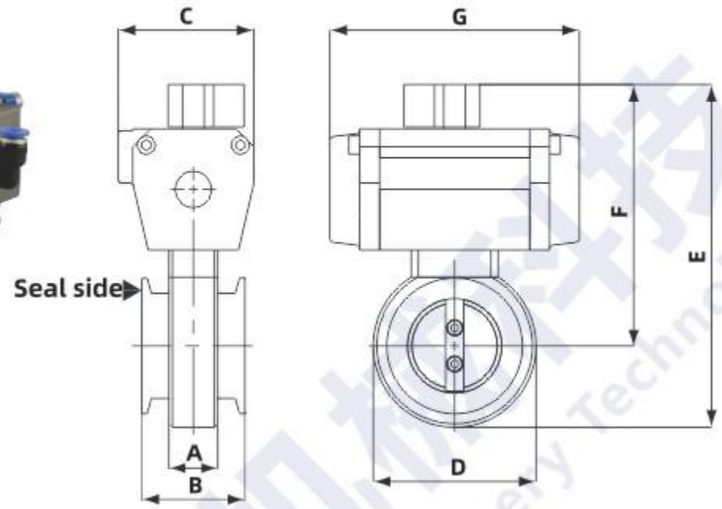

Model No.	A	B	C	D	E	F	G	Parts No.
KF25BFVP2	27	50	49	65	144	112	100	3202111101213
KF40BFVP2	27	57	75	80	192	152	138	3202131101213
KF50BFVP2	27	57	75	90	203	158	138	3202141101213

Features

- Valve size for 1"(25.4mm) to 2"(50.8mm)
- Flange : ISO-KF
- Pressure Range : 10^{-8} mbar to 2 bar
- Leak rate : $1x10^{-9}$ mbar. l/sec
- Body materials : 304S.S.
- Seal materials : Viton
- Max temperature : Actuator 60°C / Body 120°C
- Cycle life : 1,500,000
  (O-ring on plate is a consumptive material in the butterfly valve, cycle life is 250,000)
- Option : Limit switch , solenoid
- Operating air pressure : 4~6.5 kg/cm^2

Dimension in mm unless otherwise noted

All information contained herein was current at time of publication, we reserve the right to change the design/specification for products improvement without notice.

兴生机械科技 XingSheng Machinery Technology

06 VACUUM VALVE

BUTTERFLY VALVE (ISO-F TYPE)

Pneumatically Actuated

air to open, air to close

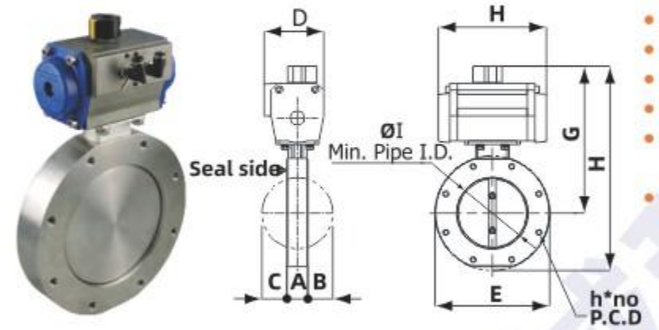

Features

- Valve size for 2-1/2" (63.5mm) to 8" (203.2mm)
- Flange : ISO-F
- Pressure Range : 10^{-8} mbar to 2 bar
- Leak rate: $1x10^{-9}$ mbar. l /sec
- Body materials : 304 S.S.
- Seal materials : Viton
- Max temperature:
  Actuator ≦ 60°C, Body ≦ 120°C
- Cycle life : ISO63-ISO160 1,500,000
  ISO200 1,000,000
  (O-ring on plate is a consumptive material in the butterfly valve, cycle life is 250,000 for ISO63-160;200,000 for ISO200)
- Option : Limit switch , solenoid
- Operating air pressure :4~6.5 kg/cm^2

Model No.	A	B	C	D	E	F	G	H	h*No	Thread Depth	P.C.D	I	Parts No.
ISO63BFVP2	30	15	21	75	130	242.1	177.1	138	M8*4	12	110	55	3202151113213
ISO100BFVP2	30	36	36	86	165	288.5	211.5	155.5	M8*8	12	145	96.7	3202181113213
ISO160BFVP2	40	55.5	55.5	86	225	351.5	241.5	155.5	M10*8	15	200	146	3202201113213
ISO200BFVP2	50	76	76	94	285	427.5	299	230	M10*12	15	260	197	3202211113213

BUTTERFLY VALVE (ISO-K TYPE)

Pneumatically Actuated

air to open, air to close

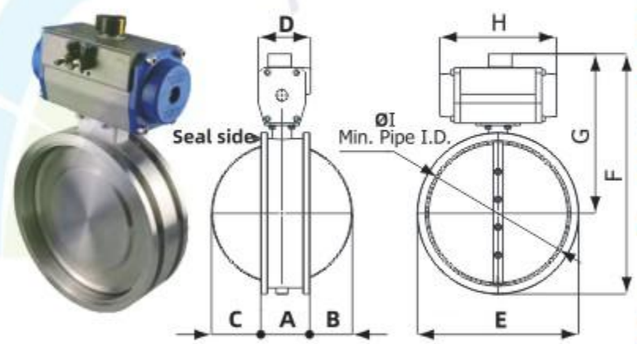

Features

- Valve size for 10" (254mm)
- Flange : ISO-K
- Pressure Range : 10^{-8} mbar to 2 bar
- Leak rate: $1x10^{-9}$ mbar. l /sec
- Body materials : 304 S.S.
- Seal materials : Viton
- Max temperature:
  Actuator ≦ 60°C, Body ≦ 120°C
- Cycle life : 1,000,000
  (O-ring on plate is a consumptive material in the butterfly valve, cycle life is 200,000)
- Option : Limit switch , solenoid
- Operating air pressure :4~6.5 kg/cm^2

Model No.	A	B	C	D	E	F	G	H	I	Parts No.
ISO250BFVP2	88	82.5	82.5	104	290	455	310	230	240	3202221103213

Dimension in mm unless otherwise noted

All information contained herein was current at time of publication, we reserve the right to change the design/specification for products improvement without notice.

3-Position Butterfly valve

Pneumatic butterfly valve

Main applications

- Compact isolation valve for high conductance clean processes
- Has a 3rd position to change the conductance. One has two functions.

Application process

FPD SEMI PVD

Application

Htc 3-position butterfly valve is driven by rotating cylinder valve. Htc 3-position butterfly valve has 3rd position function, easy installation, small size and long life cycles. The 3-position butterfly valve opening can be set from 0-90°. Main application of Htc 3-position butterfly valve will be fully isolated contaminating and aggressive gas in processes. The valve is located between pump and process chamber and 3rd position can be set to change the conductance.

Material		Body	304 S.S.
		Plate	304 S.S.
		Shaft	304 S.S.
		Gate seal	Viton
		Shaft seal	Viton
Cycles life	cycles	KF40 - KF50	1,500,000
		ISO63 - ISO160	1,500,000
Cycles life for plate O-ring	cycles	KF40 - KF50	250,000
		ISO63 - ISO160	250,000
Helium leak rate at 1 atm differential		mbar-Liter/sec	$< 1 \times 10^{-9}$
Mounting orientation		Any	
3rd position adjustment angle		0-90°	
Pressure range in either direction		1×10^{-8} mbar to 2 bar	
Differential pressure ΔP in either direction		≤ 2 bar	
Maximum differential pressure during opening		< 1.2 bar	
Compressed air connection		3 x 1/4"NPT	
Compressed air pressure		4 ~ 6 bar	

Dimension in mm unless otherwise noted
All information contained herein was current at time of publication, we reserve the right to change the design/specification for products improvement without notice.

兴生机械科技
XingSheng Machinery Technology

06 VACUUM VALVE

3-Position BUTTERFLY VALVE (ISO-KF TYPE)

Pneumatically Actuated

air to open, air to close, air to 3-position

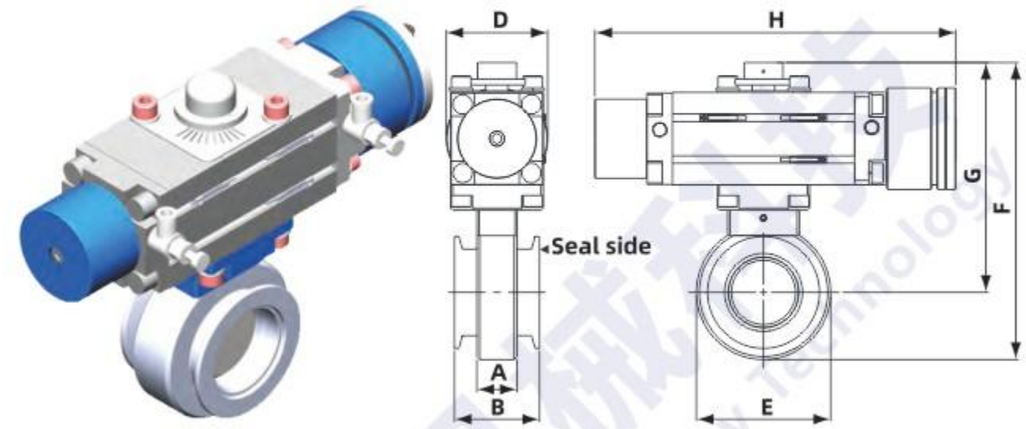

Model No.	A	B	D	E	F	G	H	Parts No.
KF40BFV3P	27	57	68	80	188.5	148.5	242	3202131101217
KF50BFV3P	27	57	68	90	199	154	242	3202141101217

Features

- Valve size for 1"(25.4mm) to 2"(50.8mm)
- Flange : ISO-KF
- Pressure Range : 10^{-8} mbar to 2 bar
- Leak rate : 1×10^{-9} mbar. l/sec
- Body materials : 304S.S.
- Seal materials : Viton
- Temperature : Actuator 60°C / Body 120°C
- Cycle life : 1,500,000
  (O-ring on plate is a consumptive material in the butterfly valve, cycle life is 250,000)
- Option : Limit switch , solenoid
- Operating air pressure : 4~6.5 kg/cm^2

Dimension in mm unless otherwise noted
All information contained herein was current at time of publication, we reserve the right to change the design/specification for products improvement without notice.

3-Position BUTTERFLY VALVE (ISO-F TYPE)

Pneumatically Actuated

air to open, air to close, air to 3-position

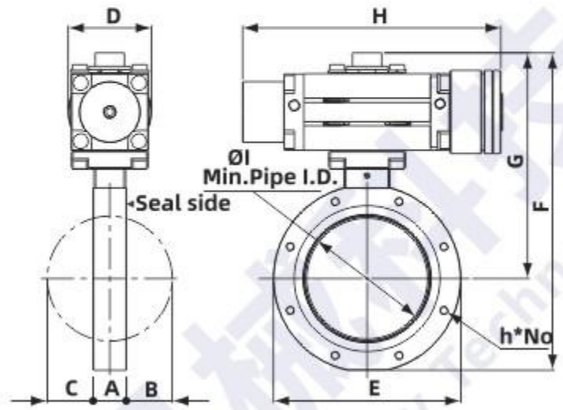

Model No.	A	B	C	D	E	F	G	H	h*No	Thread Depth	P.C.D	I	Parts No.
ISO63BFV3P	36	21	15	83	130	260	195	268.5	M8*4	12	110	55	3202151113217
ISO100BFV3P	30	36	36	83	165	296	213.5	268.5	M8*8	12	145	96.7	3202181113217
ISO160BFV3P	40	55.5	55.5	100	225	383.5	271	312	M10*8	15	200	146	3202201113217

Features

- Valve size for 1"(25.4mm) to 2"(50.8mm)
- Flange : ISO-F
- Pressure Range : 10^{-8} mbar to 2 bar
- Leak rate : $1x10^{-9}$ mbar. l/sec
- Body materials : 304S.S.
- Seal materials : Viton
- Temperature : Actuator 60°C / Body 120°C
- Cycle life : 1,500,000
  (O-ring on plate is a consumptive material in the butterfly valve, cycle life is 250,000)
- Option : Limit switch , solenoid
- Operating air pressure : 4~6.5 kg/cm^2

Dimension in mm unless otherwise noted

All information contained herein was current at time of publication, we reserve the right to change the design/specification for products improvement without notice.

兴生机械科技 XingSheng Machinery Technology

06 VACUUM VALVE

APC Butterfly valve

Main applications

- Downstream pressure control and isolation valve.

Application process

SEMI FPD Solar CVD

Features

- Integrated pressure controller
- Short response time
- Accurate pressure control
- Friendly user interface
- Compact isolation

APC butterfly valve gate system settings

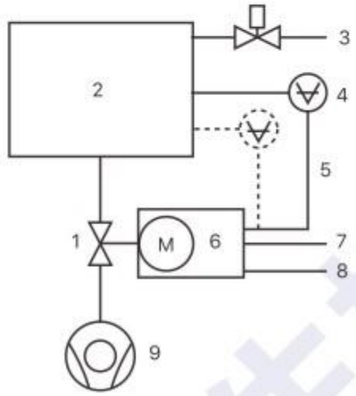

1. Valve
2. Process chamber
3. Gas inlet
4. Pressure sensor(s)
5. Sensor cable(s)
6. Controller and actuator
7. Cable to remote control unit
8. Cable to power supply
9. Pump

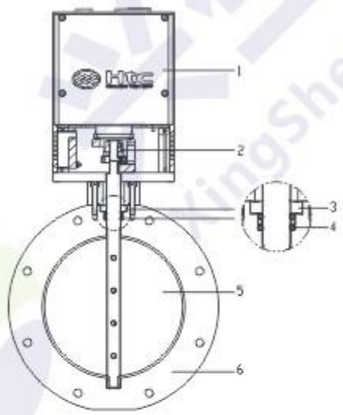

No.	Parts	Material	Quantity
1	APC Controller		1
2	Couplings	SUS304	1
3	Bearing	SUS304	1
4	O-Ring	VITON	2
5	Plate	SUS304	1
6	Body	SUS304	1

Dimension in mm unless otherwise noted

All information contained herein was current at time of publication, we reserve the right to change the design/specification for products improvement without notice.

Butterfly valve control system - Controller

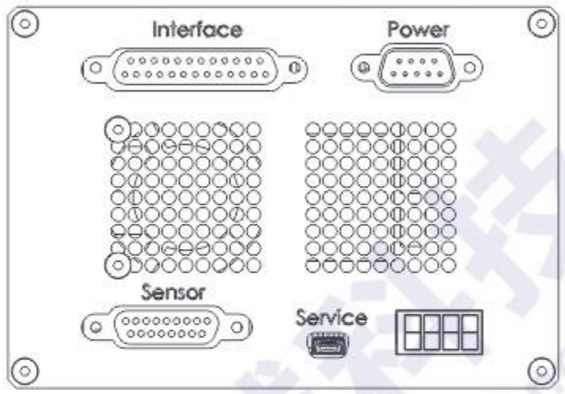

Specifications

- Sensor supply : 24V DC or ±15V DC
- Backup power : Yes
- Sensor input
  - Q'ty of sensors : 2
  - Signal voltage : 0-10V DC linear with pressure
  - Input resistance : Ri=47 k Ω
  - Resolution : 2.3 mV
  - Sample rate : 1ms
- Control accuracy : 0.1% of maximum sensor range
- Position resolution : 8000 (step 0-90° rotation)

	Connection	Type
Power	Power input	DB-9 male
Sensor	Sensor input Sensor power supply	DB-15 female
Interface	RS232, RS485	DB-25 female
Service	APC service	Mini USB type B female

APC software functions

Control via computer by using the APC software offers convenient functions

- Pressure and position control mode
- Schedule test Mode => 1 cycle schedule
- Set valve open/close speed
- Report APC HW/SW version, serial and model number
- Report valve cycles and run hours
- Set tolerance scope of pressure
- Cycles life and pressure control record
- Controller parameter upload and download
- Power failure protection
- Screen Capture
- Presure learning funtion

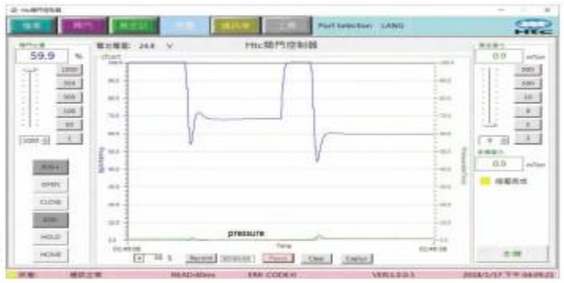

Dimension in mm unless otherwise noted
All information contained herein was current at time of publication, we reserve the right to change the design/specification for products improvement without notice.

兴生机械科技
XingSheng Machinery Technology

APC BUTTERFLY VALVE (ISO-KF TYPE)

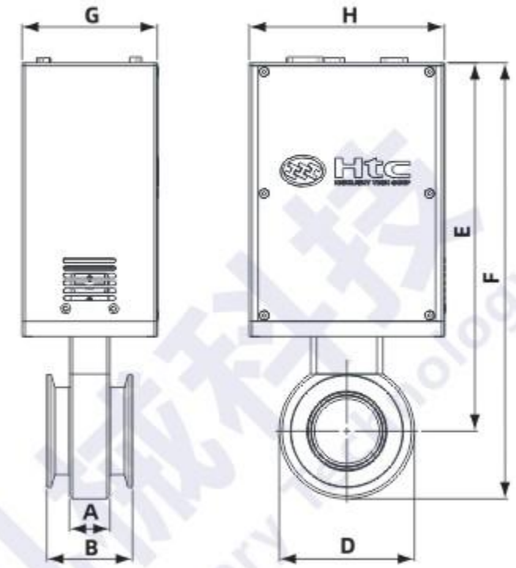

Model No.	A	B	D	E	F	G	H	Parts No.
KF40BFVC	27	57	80	239.5	279.5	90	130	3202131101214
KF50BFVC	27	57	90	245	290	90	130	3202141101214

Features

- Valve size : 1 1/2"(38.1mm), 2"(50.8mm)
- Flange : ISO-KF
- Pressure Range : 10^{-8} mbar to 1.2 bar
- Maximum differential pressure during opening : KF40 KF50 >>>> 1.0 bar
- Leak rate (valve body, valve seat) : $1x10^{-9}$ mbar. l/sec
- Cycles until first service :
  - >> Pressure control : 2,000,000
  - >> Closing / opening : 250,000
- Body, plate, shaft materials : 304 S.S.
- Seal materials : Viton
- Mounting position : Any
- Position control : Multi-position set (0° ~ 90°)
- Typical opening / closing time : 0.85 s
- Temperature : Actuater 50°C ; Body 110°C

Dimension in mm unless otherwise noted
All information contained herein was current at time of publication, we reserve the right to change the design/specification for products improvement without notice.

APC BUTTERFLY VALVE (ISO-F TYPE)

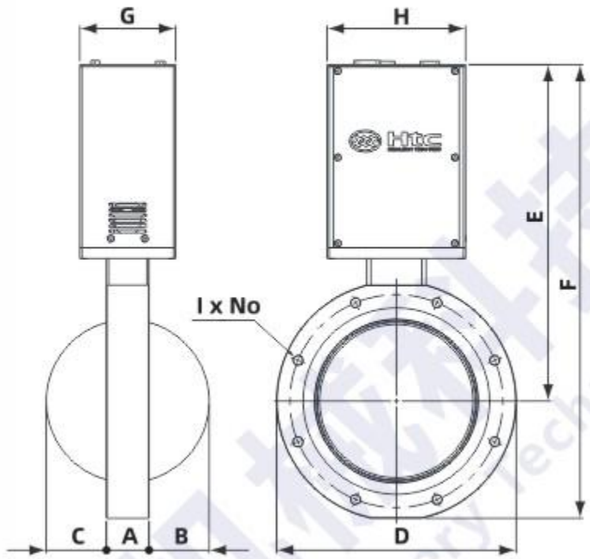

Model No.	A	B	C	D	E	F	G	H	I x No	Thread Depth	P.C.D	Parts No.
ISO63BFVC	30	15	21	130	267	327	90	130	M8*4	12	110	3202151103214
ISO100BFVC	30	36	36	165	286	363	90	130	M8*8	12	145	3202181103214
ISO160BFVC	40	55.5	55.5	225	316	426	90	130	M10*8	15	220	3202201103214

Features

- Valve size : 2 1/2"(63.5mm), 4"(101.6mm), 6"(152.4mm)
- Flange : ISO-F
- Pressure Range : 10^{-8} mbar to 1.2 bar
- Maximum differential pressure during opening : ISO63 ISO100 ISO160 >>>>>> 0.2 bar
- Leak rate (valve body, valve seat) : $1x10^{-9}$ mbar. l/sec
- Cycles until first service :
  >> Pressure control : 2,000,000
  >> Closing / opening : 250,000
- Body, plate, shaft materials : 304 S.S.
- Seal materials : Viton
- Mounting position : Any
- Position control : Multi-position set (0° ~ 90°)
- Typical opening / closing time : 0.85 s
- Temperature : Actuater 50°C ; Body 110°C

Dimension in mm unless otherwise noted
All information contained herein was current at time of publication, we reserve the right to change the design/specification for products improvement without notice.

兴生机械科技
XingSheng Machinery Technology

06 VACUUM VALVE

HV Butterfly valve-Manually Operated

Specification:

Material	Body	304 S.S.
	Plate	304 S.S.
	Shaft	304 S.S.
	Gate seal	Viton
	Shaft seal	Viton
Cycles life	100,000	
Helium leak rate at 1 atm differential	mbar.l/sec	< 1×10^{-9}
Mounting orientation	Any	
Pressure range in either direction	1×10^{-8} mbar to 1.2 bar	
Differential pressure ΔP in either direction	≤ 1.2 bar	
Maximum differential pressure during opening	< 1.2 bar	

Dimension in mm unless otherwise noted
All information contained herein was current at time of publication, we reserve the right to change the design/specification for products improvement without notice.

HV BUTTERFLY VALVES

Manually Operated, ISO-KF TYPE

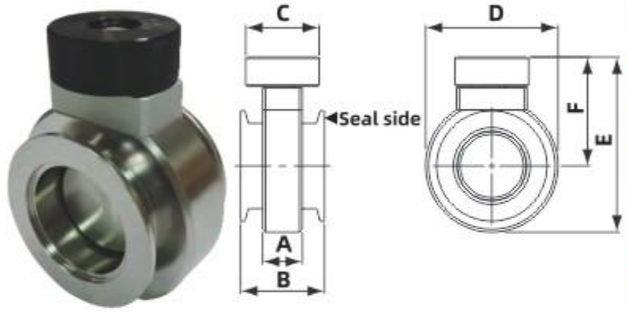

Features

- Valve size for 1" to 2"(25.4mm ~ 50.8mm)
- Flange : ISO-KF
- Pressure Range : 10^{-8} mbar to 1.2 bar
- Leak rate: $1x10^{-9}$ mbar. l /sec
- Body materials : 304 S.S.
- Seal materials : Viton
- Cycle life : 100,000
- Mounting position : Any
- Temperature: Body 120°C

Model No.	A	B	C	D	E	F	Parts No.
KF40BFVM	27	57	50	80	108.5	68.5	3202131101218
KF50BFVM	27	57	50	90	119	74	3202141101218

Manually Operated, ISO-F TYPE

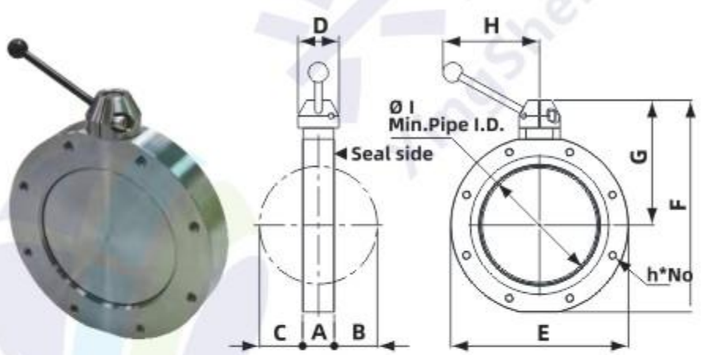

Features

- Valve size for 2.5" to 6" (63.5mm ~ 152.4mm)
- Flange : ISO-F
- Pressure Range : 10^{-8} mbar to 1.2 bar
- Leak rate: $1x10^{-9}$ mbar. l /sec
- Body materials : 304 S.S.
- Seal materials : Viton
- Cycle life : 100,000
- Mounting position : Any
- Temperature: Body 120°C

Model No.	A	B	C	D	E	F	G	H	h*No	Thread Depth	P.C.D	I	Parts No.
ISO63BFVM	36	21	15	40	130	154	94	103	M8*4	12	110	55	3202151113218
ISO100BFVM	30	36	36	40	165	190	103	103	M8*8	12	145	96.7	3202181113218
ISO160BFVM	40	55.5	55.5	52	225	268	158	122	M10*8	15	200	146	3202201113218

Dimension in mm unless otherwise noted
All information contained herein was current at time of publication, we reserve the right to change the design/specification for products improvement without notice.

兴生机械科技 XingSheng Machinery Technology

06 VACUUM VALVE

LOW VACUUM BUTTERFLY VALVES

Manually Operated, KF TYPE

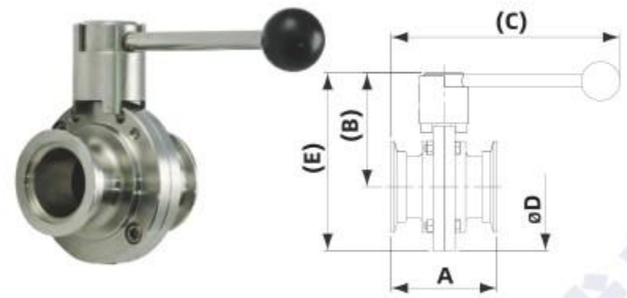

Features

- Valve size for 0.75" to 2" (19.05mm ~ 50.8mm)
- Flange : KF(NW)
- Pressure Range : 1000mbar~$1x10^{-4}$mbar
- Leak rate: $5x10^{-7}$ mbar. l /sec
- Body materials : 304 S.S.
- Seal materials : EPDM
- Cycle life : 1,000
- Temperature: Body 120°C

Model No.	A	B	C	D	E	Connector	Size	Parts No.
KF16BFV	75.6	80	183	79	119.5	KF16	0.75"(19.05)	3202092101111
KF25BFV	75.6	80	183	79	119.5	KF25	1"(25.4)	3202112101111
KF40BFV	83.6	83.3	186.8	85	125.5	KF40	1.5"(38.1)	3202132101111
KF50BFV	87.6	93.3	189	105	145.5	KF50	2"(50.8)	3202142101111

Manually Operated, ISO-K TYPE

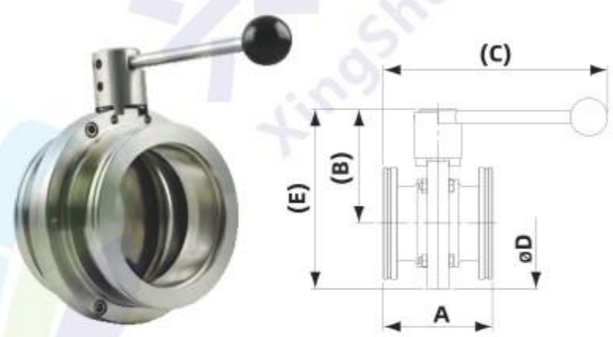

Features

- Valve size for 2.5" to 4" (63.5mm ~ 101.6mm)
- Flange : ISO-K
- Pressure Range : 1000mbar~$1x10^{-4}$mbar
- Leak rate: $5x10^{-7}$ mbar. l /sec
- Body materials : 304 S.S.
- Seal materials : EPDM
- Cycle life : 1,000
- Temperature: Body 120°C

Model No.	A	B	C	D	E	Connector	Size	Parts No.
ISO63BFV	93.2	96.6	191.6	112	152.6	ISO63	2.5"(63.5)	3202152103111
ISO80BFV	95.2	103.8	192.6	125	166.3	ISO80	3.0"(76.2)	3202162103111
ISO100BFV	101.2	120.6	195.6	157	200	ISO100	4.0"(101.6)	3202182103111

Dimension in mm unless otherwise noted
All information contained herein was current at time of publication, we reserve the right to change the design/specification for products improvement without notice.

Ball Valves

In vacuum industry, ball valves are durable and usually work to achieve perfect shutoff. A ball valve is a vacuum valve with a ball in the central part of the valve, the ball controls the flow through it. The ball has a hole, or port, through the middle so that when the port is in line with both ends of the valve, flow will occur. When the valve is closed, the hole is perpendicular to the ends of the valve, and flow is blocked. The handle or lever will be inline with the port position letting you "see" the valve's position when the valve is fully open. The ball valve, along with the butterfly valve , are part of the family of quarter turn valves.

Ball valve's simple, rugged structure provides high reliability in "dirty" vacuum application. For example, they are always used to isolate traps and scrubbers downstream from the chamber or vacuum pump in the process equipment. Ball valves also are suitable for isolating gauges, vacuum roughing lines, food processing lines and many other industrial applications.

Htc vacuum's ball valves have manual, pneumatic and electric actuators for various customers; custom design is available upon request, please contact us.

Note: Standard voltage 110V, other voltage see note *

Custom design

Dimension in mm unless otherwise noted
All information contained herein was current at time of publication, we reserve the right to change the design/specification for products improvement without notice.

兴生机械科技
XingSheng Machinery Technology

06 VACUUM VALVE

BALL VALVES

Pneumatically Actuated

air to open, air to close

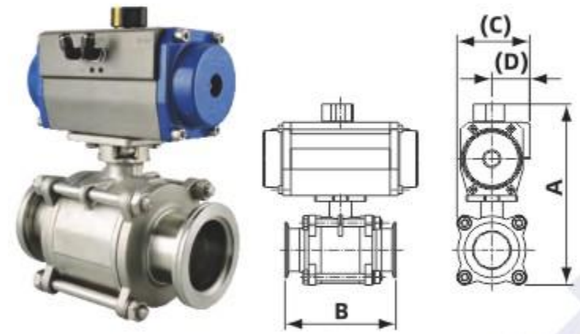

Features

- Valve size for 1" to 2"(25.4mm ~ 50.8mm)
- Flange : KF(NW)
- Pressure Range : 2 bar ~ $1x10^{-4}$ mbar
- Leak rate: $9x10^{-7}$ mbar.l/sec
- Body materials : 316 S.S., PTFE
- Max temperature : Cylinder 80°C/ Body 150°C
- Compressed air connector :
- KF25-2x1/8" NPT, KF40-KF50-2x1/4" NPT
- Option : Limit switch , solenoid
- Operating air pressure : 4~7kg/cm^2

Model No.	A	B	C	D	Connector	Size"(mm)	Parts No.
KF25BV107P2	173	107	71	41.5	KF25	1"(25.4)	3201113101133
KF40BV130P2	216	130	88	48	KF40	1.5"(38.1)	3201133101133
KF50BV151P2	247	151	99	51.5	KF50	2"(50.8)	3201143101133

Motor drive

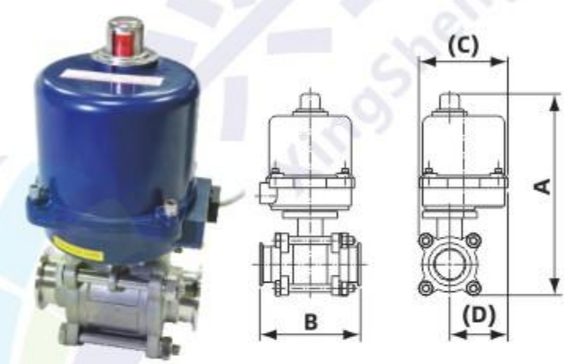

Features

- Valve size for 1" to 2"(25.4mm ~ 50.8mm)
- Flange : KF(NW)
- Pressure Range : 2 bar ~ $1x10^{-4}$ mbar
- Leak rate: $9x10^{-7}$ mbar.l/sec
- Body materials : 316 S.S., PTFE
- Max temperature : Motor drive 80°C/ Body 150°C
- Time to full open : 50Hz-13sec, 60Hz-12sec
- * The last letter of the P/N represents the Motor Voltage :
  A=AC 110V , B= AC 220V ,
  C=AC 220 3Ø , D=AC 380 3Ø
- Option : Limit switch

Note: Standard voltage 110V,other voltage see note*

Model No.	A	B	C	D	Connector	Size"(mm)	Parts No.
KF25BV107E	231	107	114	79	KF25	1"(25.4)	320111310113A
KF40BV130E	258	130	119	79	KF40	1.5"(38.1)	320113310113A
KF50BV151E	318	151	114	57	KF50	2"(50.8)	320114310113A

Dimension in mm unless otherwise noted
All information contained herein was current at time of publication, we reserve the right to change the design/specification for products improvement without notice.

BALL VALVES

Manually Operated, KF TYPE

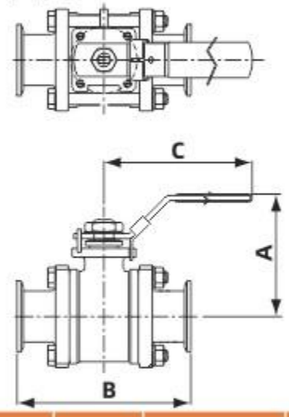

Features

- Flange : KF(NW)
- Operation 1/4 Turn manual open and close
- Pressure Range : 2 bar ~ $1x10^{-4}$ mbar
- Leak rate: $9x10^{-7}$ mbar.l/sec
- Wetted materials : 316 S.S., Viton, PTFE
- Max pressure : 2 bar
- Operating temperature : 150°C max

Model No.	A	B	C	Connector	Size"(mm)	Parts No.
KF16BV092	63	92	140	KF16	3/4"(19.05)	3201093101131
KF25BV107	76	107	157	KF25	1"(25.4)	3201113101131
KF40BV130	96	130	159	KF40	1.5"(38.1)	3201133101131
KF50BV151	102	151	178	KF50	2"(50.8)	3201143101131
KF80BV242	155	242	262	KF80	3"(76.2)	3201163101131
KF100BV254	180	254	290	KF100	4"(101.6)	3201183101131

Manually Operated, ISO TYPE

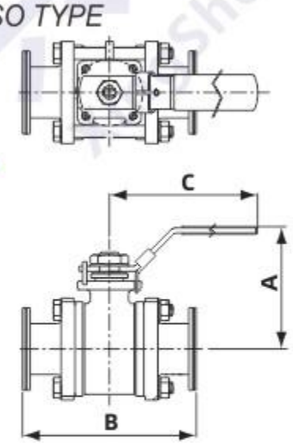

Features

- Flange : ISO
- Operation 1/4 Turn manual open and close
- Pressure Range : 2 bar ~ $1x10^{-4}$ mbar
- Leak rate: $9x10^{-7}$ mbar.l/sec
- Materials : 316 S.S., Viton, PTFE
- Max : 2 bar
- Operating temperature : 150°C max

Model No.	A	B	C	Connector	Size"(mm)	Parts No.
ISO80BV242	155	242	262	ISO80	3"(76.2)	3201163103131
ISO100BV254	180	254	290	ISO100	4"(101.6)	3201183103131

Dimension in mm unless otherwise noted
All information contained herein was current at time of publication, we reserve the right to change the design/specification for products improvement without notice.

兴生机械科技 XingSheng Machinery Technology

06 VACUUM VALVE

CHECK VALVES

Vertical direction

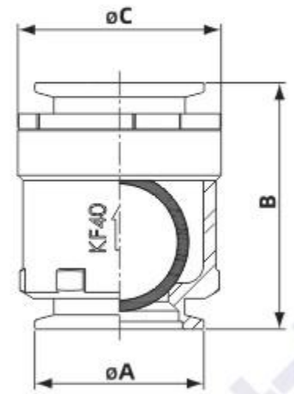

Features

- Flange : KF(NW)
- Material: body : CF8M(316) /Seal : Viton
- Temp rage :-5°C~100°C
- Leak rate : $1x10^{-5}$ mbar.l/sec
- Pressure range : $1x10^{-4}$mbar
- Relief minimum pressure △P : 7mbar
- Peak pumping speed : 10000(L/min)
- Installation position : Vertical

Model No.	A	B	C	Installation	Port	Weight (Kg)	Parts No.
KF40CV80	55	80	66	Vertical	KF40	0.7	34011301100

Any direction

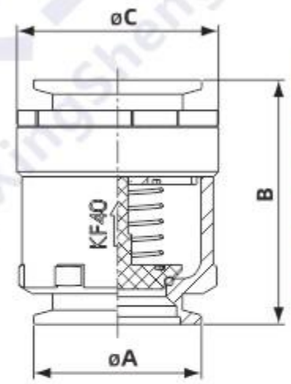

Features

- Flange : KF(NW)
- Material: body : CF8M(316) /Seal : Viton
- Temp rage :-5°C~100°C
- Leak rate : $1x10^{-5}$ mbar.l/sec
- Pressure range : $1x10^{-4}$mbar
- Relief minimum pressure △P : 7mbar
- Pea pumping speed : 10000(L/min)
- Installation position : Any

Model No.	A	B	C	Installation	Port	Weight (Kg)	Parts No.
KF40CV80S	55	80	66	Any	KF40	0.75	34011311100

Dimension in mm unless otherwise noted
All information contained herein was current at time of publication, we reserve the right to change the design/specification for products improvement without notice.

VENT VALVES

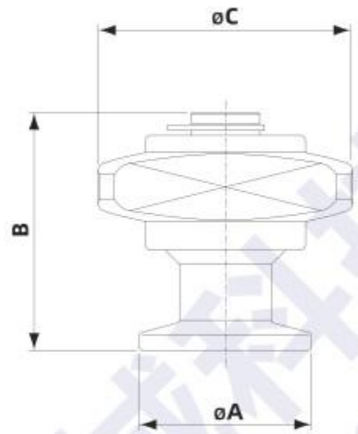

Model No.	A	B	C	Port	Parts No.
KF10VVM	30	41.5	48	KF10	340207011
KF16VVM	30	41.5	48	KF16	340209011
KF25VVM	40	41.5	48	KF25	340211011
KF40VVM	55	41.5	48	KF40	340213011

Features

- Flange:KF(NW)
- Installation Angle: Any
- Valve completely opened: 2 Turns
- Venting Times(50L): 14 Sec
- Pressure Range: 1×10^{-8}mbar ~ 1000mbar
- Leak rate: 1×10^{-9} mbar.l/s
- Valve Body: 304S.S.
- Plate: 304S.S.
- Washer: Teflon
- O-ring: Viton
- Screw cap: Aluminum
- Weight: 0.1kg

Dimension in mm unless otherwise noted
All information contained herein was current at time of publication, we reserve the right to change the design/specification for products improvement without notice.

兴生机械科技
XingSheng Machinery Technology

06 VACUUM VALVE

BAKEABLE ALL-METAL VALVES

Angle Valve

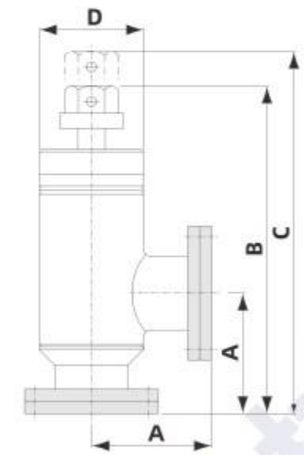

Features

- Temperature operating range:
- Bakeable to: 400°C(open), 300°C(close)
- Cryogenic to: -200°C
- Pressure Range: $1x10^{-10}$mbar~1000mbar
- All stainless steel construction
- Bellows stem seal
- Leak Rate: $5X10^{-10}$ mbar.l/sec
- Closure Torque:
  CR16 First 150kg-cm, Maximum 250kg-cm
  CR35 First 300kg-cm, Maximum 600kg-cm.
  CR63 First 300kg-cm, Maximum 900kg-cm.
- Orientation: Any position

Model No.	A	B	C	D	O.D.	Parts No.
AVBAK-CR16	38.1	121.2	131	38.1	19.05	300509030011
AVBAK-CR35	62.5	170	187	54	38.1	300513030011
AVBAK-CR63	105	266	294	76.2	63.5	300515030011

Straight-Through Valve

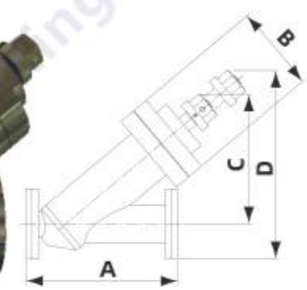

Features

- Temperature operating range:
- Bakeable to: 400°C(open), 300°C(close)
- Cryogenic to: -200°C
- Pressure Range: $1x10^{-10}$mbar~1000mbar
- All stainless steel construction
- Bellows stem seal
- Leak Rate: $5X10^{-10}$ mbar.l/sec
- Closure Torque:
  CR35 First 300kg-cm, Maximum 600kg-cm.
  CR63 First 300kg-cm, Maximum 900kg-cm.
- Orientation: Any position

Model No.	A	B	C	D	O.D.	Parts No.
STVBAK-CR35	152.4	86	125	184	38.1 / 25.4	307513030011
STVBAK-CR63	228.6	113.6	165	247	60.5 / 34	307515030011

Dimension in mm unless otherwise noted
All information contained herein was current at time of publication, we reserve the right to change the design/specification for products improvement without notice.

TEFLON COATING VACUUM VALVE(TCVV)

Technical data

Flanges	KF & ISO
Installation angle	Any position
Pressure range	1atm ~ $1x10^{-7}$ mbar
Leak rate	$2x10^{-9}$ mbar.l/s
Material of valve body	304S.S.
Material of lining	Teflon (Perma Shield Coating)
Poppet seal	Viton(other material available upon request)
Operating air pressure	4 ~ 6.5 kg/cm^2
Solenoid	Option
Reed sensor	Qty:2 (VDC4~24 ; VAC4~240 ; 5~40mA)

Features

1. Teflon coating and Teflon parts inside valve for process gases.
2. Very smooth surface of the coating layer.
3. Continuous use to 120°C in most applications.
4. The coating layer is mechanically tough with excellent adhesion and abrasion resistance.
5. The coating layer is inert and will not absorb water or chemicals.
6. Fully opening for improved conductance.
7. Position sensors can be installed on the cylinder for valve open/close indication.
8. FFKM O-ring available upon request.
9. Manual operating or fail safe operating (closes in the event of air pressure loss) available upon request.

Applications

Teflon coating vacuum valve(TCVV) is a fully engineered device of stainless steel vacuum component with its durable and highly chemical resistant coating. The Teflon (Perma Shield Coating) lining is available in a wide range of Htc's standard vacuum valves from 1"(25)valve port diameter to 6"(150)port diameter.

With more options to get the job done than any other vacuum parts manufacturer and the ability to produce customized design valves. TCVV can meet most of your corrosive fume exhaust duct and vent pipe requirements.

TCVV can be applied in the following industries :mining, petrochemical, plastic industries, gas refining, power plant, gas manufacture, electronic industries, pharmaceutical, semiconductor industries, optoelectronic industries, solar cell industries etc.

Dimension in mm unless otherwise noted
All information contained herein was current at time of publication, we reserve the right to change the design/specification for products improvement without notice.

兴生机械科技 XingSheng Machinery Technology

TEFLON COATING VALVES

Angle valve-Pneumatic

Normally Close

Normally Open

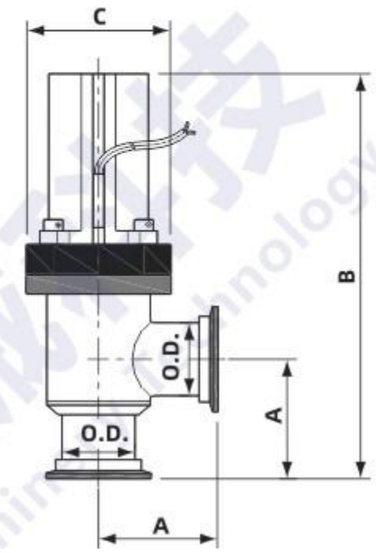

Model No.	A"(mm)	B"(mm)	C"(mm)	O.D. "(mm)	Note	Parts No.
AVTCS-KF25-P	2.03"(51.6)	6.53"(166.6)	2.24"(56.8)	1"(25.4)	Normally Close	300711110250
AVTCS-KF25-P-N0	2.03"(51.6)	6.45"(165.9)	2.24"(56.8)	1"(25.4)	Normally Open	300711410250
AVTCS-KF40-P	2.4"(61)	8.28"(210.2)	2.98"(75.8)	1.5"(38.1)	Normally Close	300713110250
AVTCS-KF40-P-N0	2.4"(61)	8"(203.2)	2.98"(75.8)	1.5"(38.1)	Normally Open	300713410250
AVTCS-KF50-P	3.4"(86.3)	10.5"(267.6)	3.48"(88.4)	2"(50.8)	Normally Close	300714110250
AVTCS-KF50-P-N0	3.4"(86.3)	10.4"(263.5)	3.48"(88.4)	2"(50.8)	Normally Open	300714410250

Note:

1. Normally close : spring to close, air to open
   Normally open : spring to open, air to close
2. Dimension in inch(mm) unless otherwise noted

Dimension in mm unless otherwise noted
All information contained herein was current at time of publication, we reserve the right to change the design/specification for products improvement without notice.

TEFLON COATING VALVES

Y in-line valve-Pneumatic

Normally Close　　Normally Open

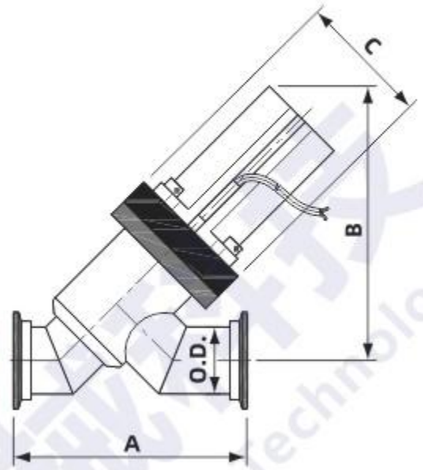

Model No.	A"(mm)	B"(mm)	C"(mm)	O.D. "(mm)	Note	Parts No.
YVTCS-KF25-P	4.2"(106.8)	4.76"(120.96)	2.24"(56.8)	1"(25.4)	Normally Close	304711110250
YVTCS-KF25-P-N0	4.2"(106.8)	4.76"(120.96)	2.24"(56.8)	1"(25.4)	Normally Open	304711410250
YVTCS-KF50-P	7"(130)	7.43"(157.83)	3.48"(88.4)	2"(50.8)	Normally Close	304714110250
YVTCS-KF50-P-N0	7"(130)	7.3"(152.88)	3.48"(88.4)	2"(50.8)	Normally Open	304714410250
YVTCS-ISO80-P2	10.5"(268.5)	8.5"(217.22)	4.48"(114)	3"(76.2)	Double-Acting	304716240250
YVTCS-ISO100-P2	13.4"(340.6)	10.4"(264.45)	5.96"(151.6)	4"(101.6)	Double-Acting	304718240250

Note:

1. Normally close : spring to close, air to open
   Normally open : spring to open, air to close
   Double-Acting : air to open, air to close
2. Dimension in inch(mm) unless otherwise noted

Dimension in mm unless otherwise noted
All information contained herein was current at time of publication, we reserve the right to change the design/specification for products improvement without notice.

兴生机械科技
XingSheng Machinery Technology

06 VACUUM VALVE

TEFLON COATING VALVES

Angle Valve-Mannal

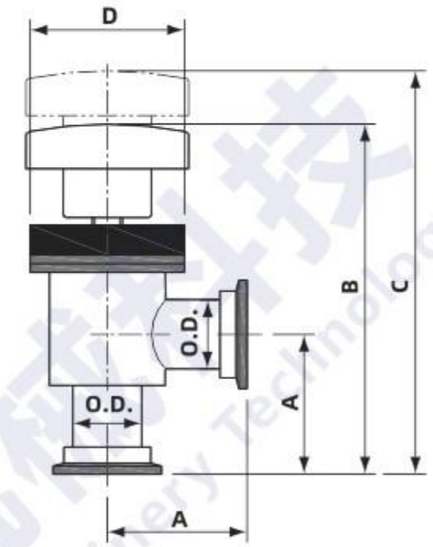

Model No.	A"(mm)	B"(mm)	C"(mm)	D"(mm)	O.D."(mm)	Parts No.
AVTC-KF25-M	2.03"(51.6)	5.27"(133.9)	5.75"(146.2)	2.24"(56.8)	1"(25.4)	300711010050
AVTC-KF40-M	2.4"(61)	6.45"(163.8)	7.2"(183)	2.98"(75.8)	1.5"(38.1)	300713010050
AVTC-KF50-M	3.4"(86.3)	8.15"(207)	9.08"(230.7)	3.48"(88.4)	2"(50.8)	300714010050

Dimension in mm unless otherwise noted
All information contained herein was current at time of publication, we reserve the right to change the design/specification for products improvement without notice.

Angle Valves with Heating Jacket

Pneumatic Actuated

With bellows, air to open, air to close

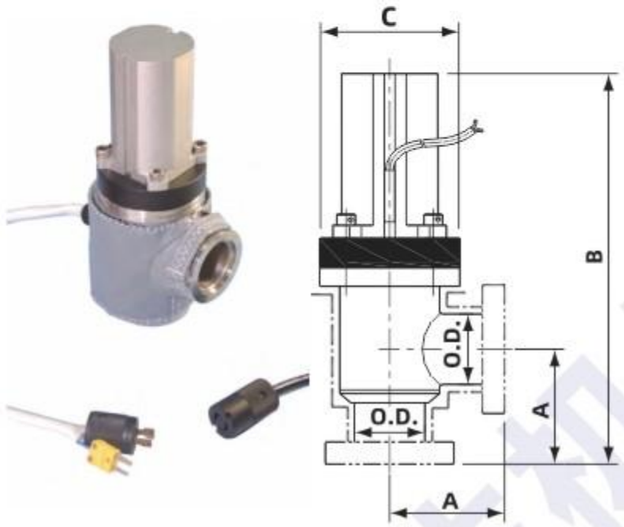

Features

- Voltage : 110/220AVC
- Temperature : 170°C
- Connecter : K Type Thermocouple & Plug
- Wire Length: 2 m
- Other size of heating jacket could be on request.

Port Connections: KF & ISO Flange

Model No.	A"(mm)	B"(mm)	C"(mm)	O.D."(mm)	Voltage	Parts No.
HAVBS-KF25-P2	2.03"(51.6)	6.14"(155.9)	2.24"(56.8)	1.00"(25.4)	110	300111710216
HAVBS-KF40-P2	2.40"(61)	7.57"(192.2)	2.98"(75.8)	1.50"(38.1)	110	300113710216
HAVBS-KF50-P2	3.4"(86.3)	9.59"(243.6)	3.48"(88.4)	2.00"(50.8)	110	300114710216
HAVBS-ISO63-P2	3.26"(82.8)	10.85"(275.7)	3.92"(99.5)	2.50"(63.5)	110	300115740216
HAVBS-ISO100-P2	4.47"(113.5)	13.86"(352.1)	5.97"(151.6)	4.00"(101.6)	110	300118740216

Dimension in mm unless otherwise noted

All information contained herein was current at time of publication, we reserve the right to change the design/specification for products improvement without notice.

兴生机械科技
XingSheng Machinery Technology

06 VACUUM VALVE

Valves kit

Figure1

Figure2

Figure3

Spare Parts For 16~50 Manual Bellows Type Vacuum Valves

Kit P/N	Content	Figure	For Port Size inches/(MM)
3001110K	Poppet seal x 1 – Viton Bonnet seal x 1 – Viton	1	0.75" / (16) ; 1.00" / (25)
3001130K			1.50" / (40)
3001140K			2.00" / (50)

Spare Parts For 16~50 Manual Bellows Type Vacuum Valves (air to open , spring to close)

Kit P/N	Content	Figure	For Port Size inches/(MM)
3001115K	Poppet seal x 1 – Viton Bonnet seal x 1 – Viton Shaft seal x 2 – NBR Cylinder seal x 2 – NBR	2	0.75" / (16) ; 1.00" / (25)
3001135K			1.50" / (40)
3001145K			2.00" / (50)

Spare Parts For 16~50 Manual Bellows Type Vacuum Valves (air to open , air to close)

Kit P/N	Content	Figure	For Port Size inches/(MM)
3001116K	Poppet seal x 1 – Viton Bonnet seal x 1 – Viton Shaft seal x 2 – NBR Cylinder seal x 2 – NBR	2	0.75" / (16) ; 1.00"/ (25)
3001136K			1.50" / (40)
3001146K			2.00" / (50)

Bellows Assembly Kit

Part No	Content	Figure	For Port Size inches/(MM)
300111000016BA	Bellows Assembly	3	0.75" / (16) ; 1.00" / (25)
300113000016BA			1.50" / (40)
300114000016BA			2.00" / (50)

Dimension in mm unless otherwise noted

All information contained herein was current at time of publication, we reserve the right to change the design/specification for products improvement without notice.

AL HV Valve Kit

Figure1

Figure2

Figure3

Spare Parts For 16~40 Manual Bellows Type Vacuum Valves

Kit P/N	Content	Figure	For Port Size inches/(MM)
3101090K	Poppet seal x 1 – Viton Bonnet seal x 1 – Viton	1	0.75" / (16)
3101110K			1" / (25)
3101130K			1.50" / (40)

Spare Parts For 16~50 Manual Bellows Type Vacuum Valves (air to open , spring to close)

Kit P/N	Content	Figure	For Port Size inches/(MM)
3101095K	Poppet seal x 1 – Viton Bonnet seal x 1 – Viton	1	0.75" / (16) ; 1.00" / (25)
3101115K			1.50" / (40)
3101135K			2.00" / (50)

Spare Parts For 16~50 Manual Bellows Type Vacuum Valves (air to open ,air to close)

Kit P/N	Content	Figure	For Port Size inches/(MM)
3101096K	Poppet seal x 1 – Viton Bonnet seal x 1 – Viton Shaft seal x 2 – NBR Cylinder seal x 2 – NBR	2	0.75" / (16)
3101116K			1.00" / (25)
3101136K			1.50" / (40)

Bellows Assembly Kit

Part No	Content	Figure	For Port Size inches/(MM)
31010911002ABA	Bellows Assembly	3	0.75" / (16)
31011111002ABA			1.00" / (25)
31011311002ABA			1.50" / (40)

Dimension in mm unless otherwise noted
All information contained herein was current at time of publication, we reserve the right to change the design/specification for products improvement without notice.

兴生机械科技
XingSheng Machinery Technology

Memo

06 VACUUM VALVE

Dimension in mm unless otherwise noted
All information contained herein was current at time of publication, we reserve the right to change the design/specification for products improvement without notice.

07 GATE VALVE

Vacuum gate valves manufacturers..... 7-4
Gate Valve(Technical Data)..... 7-5
Linkage mechanism.....7-6
Ball groove mechanism.....7-6
Numbering System.....7-7
UHV-gate valves (unlubricated mechanism).....7-8
CF Flange-mini Manual UHV.....7-9
CF Flange-mini Pneumatic UHV.....7-9
CF Flange-large Pneumatic UHV.....7-10
CF Flange-Ball Manual.....7-11
CF Flange-Ball Pneumatic.....7-12
3-Position-Throttle Ball UHV.....7-13
HV Gate Valve (Linkage mechanism).....7-15
KF Flange-mini Manual HV.....7-16
KF Flange-mini Pneumatic HV.....7-16
ISO Flange-large Pneumatic HV.....7-17
ISO Flange Manual HV.....7-18
ISO Flange Pneumatic HV.....7-19
3-Position Throttle Linkage mwchanism HV.....7-20
3-Position Throttle ISO HV.....7-21
Limit Switch UHV Gate Valve.....7-22
Limit Switch CF-Mini UHV.....7-23
Limit Switch CF Large UHV.....7-24
Limit Switch CF UHV.....7-25
Limit Switch HV Gate Valve 7-26
Limit Switch KF-Mini HV.....7-27
Limit Switch ISO Large HV.....7-28
Limit Switch ISO Ball HV.....7-29
Gate valve kit.....7-30
HV Aluminum Gate Valve.....7-31
Pendulum valves.....7-32
Pendulum-Nickel plated.....7-33
Pendulum-Hard anodized.....7-33
3-Position Pendulum valves.....7-34
3-Position Pendulum-Nickel plated.....7-35
3-Position Pendulum- Hard anodized.....7-35
APC Pendulum valves.....7-36
APC Pendulum- Nickel plated.....7-38
APC Pendulum-Hard anodized.....7-39
Transfer valves and doors.....7-40
Rectangular transfer-Electrolytic polishing.....7-41
Rectangular transfer-Hard anodized.....7-43
Rectangular doors valve.....7-45

GATE VALVES

Vacuum gate valves manufacturers

Htc vacuum (HIGHLIGHT TECH CORP.) gate valves are appropriate for both HV and UHV applications and can be operated in pneumatic or in manual modes. Htc gate valves can be used with Cryo-Pumps, Turbomolecular Pumps or in any applications requiring clean, high life cycle, and low maintenance processing. Htc gate valves are available in all flange configurations, KF, ISO, ANSI, JIS, and CF.

Vacuum gate valve advanced service and support

Htc vacuum gate valve are available with various options to allow you to select exactly the features you need for your applications. You can add the roughing and gauge ports on the basic valve style.

Please refer to the left photo :
we added an elbow with a CF flange on the valve body to meet the special requirement of the customer. If you have any unique inquiry please contact us, we can discuss about the details of port type, size and location.

There are some critical applications of valves in Lab and research center which need RGA (Residual Gas Analyzer) data of valves to confirm the outgassing source of the system. Htc has the integrated RGA system with Inficon MPH100M analyzer with industry-leading data collection speed, minimum detectable partial pressure and signal-to-noise ratio. Htc is able to provide customers the RGA report for the price of the fixture and norminal labor charge.

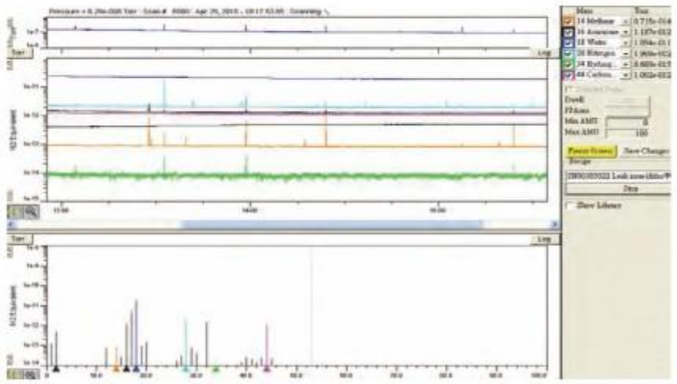

All information contained herein was current at time of publication, we reserve the right to change the design/specification for products improvement without notice.

*Note * L type: Linkage mechanism *B type: Ball groove mechanism*

Type \ Size	Shaft sea	HV VALVE												UHV VALVE								
		KF 10	KF 16	KF 25	KF 40	KF 50	ISO 63	ISO 80	ISO 100	ISO 160	ISO 200	ISO 250	ISO 320	CF 16	CF 35	CF 50	CF 63	CF 100	CF 150	CF 200	CF	CF 250
GATE VALVES																						
UHV gate valve (L type) (Manual & Pneumatic)	Bellows																					
UHV gate valve (B type) (Manual & Pneumatic)	Bellows																					
UHV 3-position gate valve (B type) (Pneumatic)	Bellows																					
UHV gate valve limit switch (L type) (Pneumatic)	Bellows																					
UHV gate valve limit switch (B type) (Pneumatic)	Bellows																					
HV gate valve (L type) (Manual & Pneumatic)	Bellows																					
HV gate valve (B type) (Manual & Pneumatic)	Bellows																					
HV 3-position gate valve(B type) (Pneumatic)	Bellows																					
HV gate valve limit switch (L type) (Pneumatic)	Bellows																					
HV gate valve limit switch (B type) (Pneumatic)	Bellows																					
HV gate valve (Aluminum body) (Pneumatic)	O-ring																					
PENDULUM VALVES																						
Pneumatic Pendulum Valve	O-ring																					
3-position pneumatic Pendulum Valve	O-ring																					
APC pneumatic Pendulum Valve	O-ring																					

*Note *EP: Electrolytic polishing surface treatment *Hard anodized: Hard anodized surface treatment*

Type \ Size	Shaft seal system	Standard (S.S. body / gate)				Standard (AL body / gate)				Customized
		32x222	46x236	50x336	56x496	32x222	46x236	50x336	56x496	50~200x2000 max
TRANSFER VALVES AND DOORS										
Rectangular Transfer valve(EP)	Bellows									
Rectangular Transfer valve (Hard anodized)	Bellows									upon request
Door valve(EP)										

Dimension in mm unless otherwise noted

All information contained herein was current at time of publication, we reserve the right to change the design/specification for products improvement without notice.

兴生机械科技
XingSheng Machinery Technology

07 GATE VALVE

*Note * L type: Linkage mechanism *B type: Ball groove mechanism*

GATE VALVES

CF Manually UHV (L type)	CF Manually UHV (B type)	CF Pneumatic UHV (L type)	CF Pneumatic UHV (L type)	CF Pneumatic UHV (B type)	CF 3-position pneumatic UHV (B type)
Bellows	Bellows	Bellows	Bellows	Bellows	Bellows

GATE VALVES

KF Manually HV (L type)	ISO Manually HV (B type)	KF Pneumatic HV (L type)	ISO Pneumatic HV (L type)	ISO Pneumatic HV (B type)	ISO 3-position pneumatic HV (B type)
Bellows	Bellows	Bellows	Bellows	Bellows	Bellows

GATE VALVES

CF limit switch pneumatic UHV (L type)	CF limit switch pneumatic UHV (L type)	CF limit switch pneumatic UHV (B type)	KF limit switch pneumatic HV (L type)	ISO limit switch pneumatic HV (L type)	ISO limit switch pneumatic HV (B type)
Bellows	Bellows	Bellows	Bellows	Bellows	Bellows

GATE VALVES | **PENDULUM VALVES** | **TRANSFER VALVES AND DOORS**

HV Pneumatic (Alumium body)	Pneumatic Pendulum Valve	3-position pneumatic Pendulum Valve	APC pneumatic Pendulum Valve	Transfer valve EP	Transfer valve Hard anodized	Door valve EP
O-ring	O-ring	O-ring	O-ring	Bellows	Bellows	Bellows

Dimension in mm unless otherwise noted

All information contained herein was current at time of publication, we reserve the right to change the design/specification for products improvement without notice.

Gate Valve(Technical Data)

Linkage mechanism

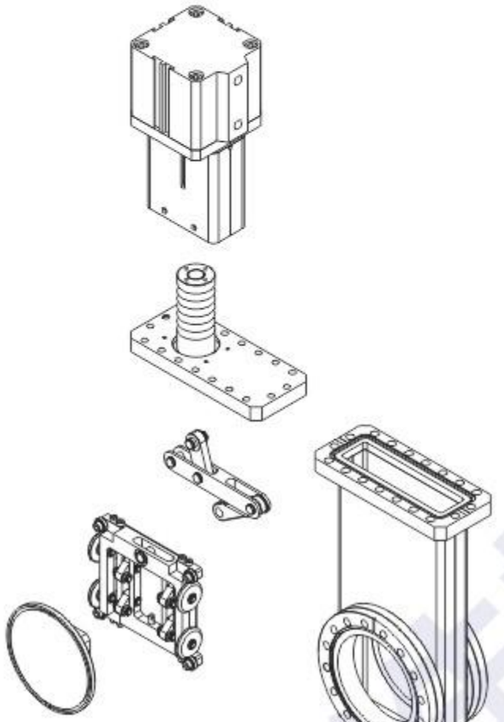

Ball groove mechanism

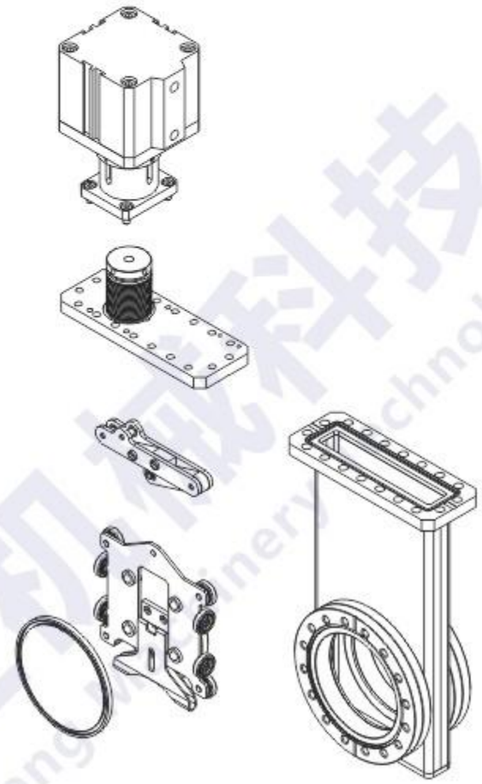

Body Size(Type)	Standard Flange O.D.(Weight)			Air Pressure	Actuated Frequency
	ISO (kg)	CF(kg)	KF(kg)	Kg/cm2	Opening & Closing
1.5" (L)	*	69.5 (2.6)	50 (2.6)	4~6	2 seconds
2" (L)	*	86 (3.6)	75 (4)	4~6	2 seconds
2.5" (B)	130 (7)	113.6 (7)	*	4~6	3 seconds
4" (B)	165 (10)	151.6 (11)	*	4~6	3 seconds
6" (B)	255 (18)	202.5 (17)	*	4~6	5 seconds
8" (B)	285 (27)	253.2 (26)	*	4~6	5 seconds
10" (L)	335 (59)	336.5 (63)	*	4~6	5 seconds
12" (L)	425 (88)	355.6 (77)	*	4~6	7 seconds

Dimension in mm unless otherwise noted

All information contained herein was current at time of publication, we reserve the right to change the design/specification for products improvement without notice.

兴生机械科技
XingSheng Machinery Technology

07 GATE VALVE

Linkage mechanism

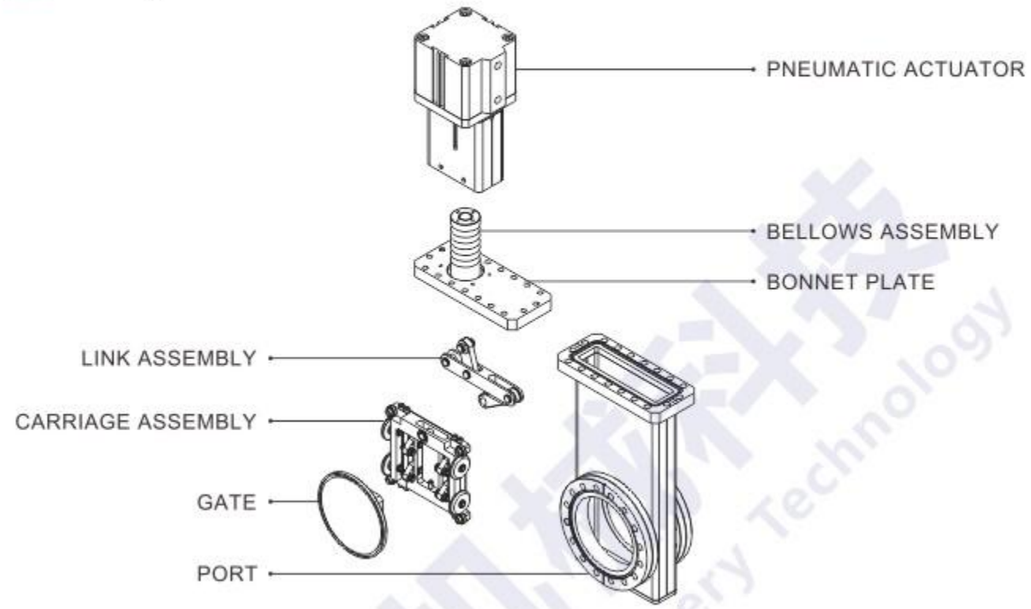

Ball groove mechanism

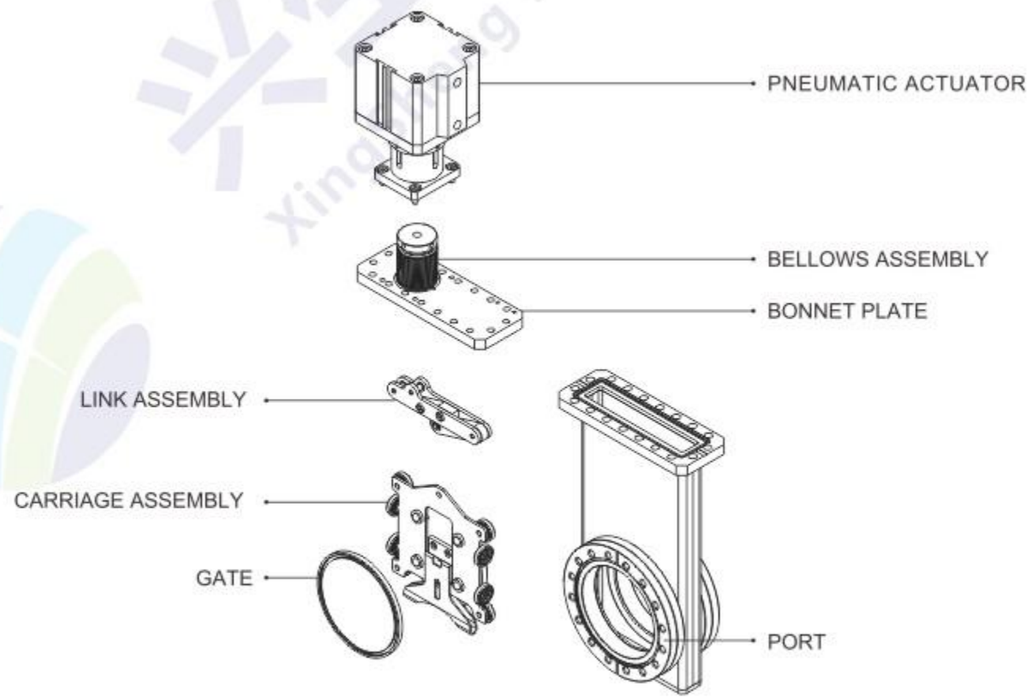

Dimension in mm unless otherwise noted

All information contained herein was current at time of publication, we reserve the right to change the design/specification for products improvement without notice.

Numbering System

This numbering system was developed to insure the valve supplied is exactly what you need. It addresses questions concerning available features and options for the valve, and incorporates that information in the valve number.

G B 3 E 1 1 1 * *

Valve Body Type
A=Bellows type
(SS) (O) (Bonnet) **
B=Bellows type
(SS) ('M) (Bonnet) **

Flange Type
1=KF
2= DIN
3=CF
4=ISO
5=ANSI
6=VF
7=VG
A=ANSI (S) *
B=ANSI (O) *
C=VG (S) *
D=VG (O) *

Gate O-Ring Material
1=Viton
2=Buna-N
3=Silicone
4=FFKM
5=HFKM

Type of Actuation
1=Manual
3= Pneumatic
4=Ball groove mechanism (M)
5=Ball groove mechanism (P)
6=3-Position_B type
7=3-Position_L type

Size
A=1.5" (40)
B=2" (50)
C=2.5" (63)
D=3" (80)
E=4" (100)
F=6" (160)
G=8" (200)
H=10" (250) / 275 (13.25")
J=12" (300_14")
K=10" (250) Flange OD=304 (12")
Q=12" (300_14.5")
L=14" (350)
M=16" (400)
N=20" (500)
P=26" (630)
S=1" (25)

Port Flange Neck Style
1=Tapped Holes Both Side
2=Neck Flange Both Side
3=Neck Flange Seal Side
4=Neck Flange on Open Side

Solenoid

Type	Voltage	Reed sensor	Limit switch
AA	110VAC		
AB	110VAC	v	
AC	110VAC		v
BA	220VAC		
BB	220VAC	v	
BC	220VAC		v
CA	24VDC		
CB	24VDC	v	
CC	24VDC		v
DA	12VDC		
DB	12VDC	v	
DC	12VDC		v
NA	-	v	
NB	-		v
EA	24VAC(50HZ)		
EB	24VAC(50HZ)	v	
EC	24VAC(50HZ)		v
FA	24VAC(60HZ)		
FB	24VAC(60HZ)	v	
FC	24VAC(60HZ)		v
NC		*1v	

Special

S0~S9	Special type , roughing port
S1	Seal Side 1Kg Pressure difference

Note:
13.25"_14"_12"_14.5" are the sizes CF/CR Flanges.

Note:
* ANSI / VG (S) is flange with o-ring on seal side.
* ANSI / VG (O) is flange with o-ring on open side.
** Bellows type (SS) (M) is bonnet with Metal seal.
** Bellows type (SS) (O) is bonnet with o-ring seal.

Dimension in mm unless otherwise noted
All information contained herein was current at time of publication, we reserve the right to change the design/specification for products improvement without notice.

兴生机械科技
XingSheng Machinery Technology

07 GATE VALVE

UHV Gate Valve (Unlubricated mechanism)

Material	Body		304 S.S.
	Carriage		304 S.S.
	Gate		304 S.S.
	Bellows		AM350
Cycle life	size under 4" (included)		100,000
	size above 4"		50,000
Helium leak rates at 1 atm differential	< 5×10^{-10} mbar. l /sec for gasket seal		
Bake Temperature	Valve body (metal bonnet seal)	Open	200°C
		Closed	150°C
	Actuator	Pneumatic	≤ 80 °C
		Manual	≤ 200°C
Pressure Range (mbar)	1×10^{-10} ~1000		
Maximum P (mbar)	27 before opening		
Standard Seal	Gate	Viton O-ring	
	Bonnet	OFHC copper gasket	
Actuator	Pneumatic or Manual		
Compressed air supply Tube connection Pressure range	Ø6 mm 4~6 Kg/cm^2 (overpressure)		
Surface Treatment	Scotch Polished		
Options	a. Position indicator c. Roughing port	b. Pneumatic control solenoid valve d. Other material Gate O-ring seal	

Dimension in mm unless otherwise noted
All information contained herein was current at time of publication, we reserve the right to change the design/specification for products improvement without notice.

UHV Gate Valve (Linkage mechanism)

CF Flange(Mini)

Manual series (with Bellows, Metal Bonnet Seal)

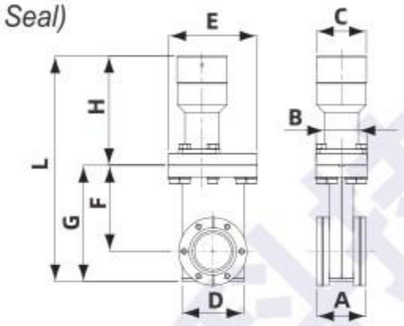

Model No.	Parts No.	Port Dia.	Bonnet seal	Flange O.D.	Bolt P.C.D.	Bolt Size * No.	Torque (kg~cm)	Thread Depth
GVB-SS-CF35-M	GB3A111	37.5	Metal	69.5	58.7	M6*6	170	10
GVB-SS-CF50-M	GB3B111	50	Metal	86	72.4	M8*8	210	13

Model No.	Parts No.	A	B	C	D	E	F	G	H	L
GVB-SS-CF35-M	GB3A111	45.4	52	51	63	90	88	119	113	232
GVB-SS-CF50-M	GB3B111	56	56	51	81	104	123	167	129	296

UHV Gate Valve (Linkage mechanism)

CF Flange(Mini)

Pneumatic series (with Bellows, Metal Bonnet Seal)

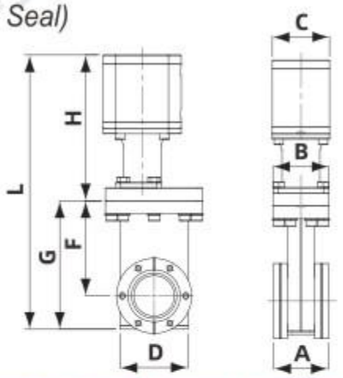

Model No.	Parts No.	Port Dia.	Bonnet seal	Flange O.D.	Bolt P.C.D.	Bolt Size * No.	Torque (kg~cm)	Thread Depth
GVB-SS-CF35-P	GB3A311	37.5	Metal	69.5	58.7	M6*6	170	10
GVB-SS-CF50-P	GB3B311	50	Metal	86	72.4	M8*8	210	13

Model No.	Parts No.	A	B	C	D	E	F	G	H	L
GVB-SS-CF35-P	GB3A311	45.4	52	53	63	90	88	119	135	254
GVB-SS-CF50-P	GB3B311	56	56	53	81	104	123	167	154	321

Dimension in mm unless otherwise noted

All information contained herein was current at time of publication, we reserve the right to change the design/specification for products improvement without notice.

兴生机械科技
XingSheng Machinery Technology

UHV Gate Valve (Linkage mechanism)

CF Flange(Large)

Pneumatic series (with Bellows, Metal Bonnet Seal)

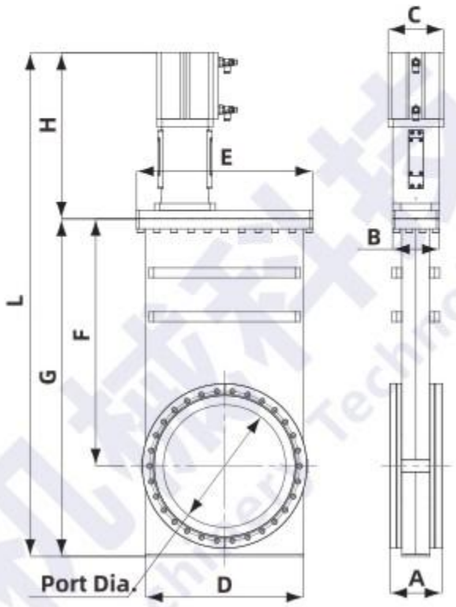

Model No.	Parts No.	Port Dia.	Bonnet seal	Flange O.D.	Bolt P.C.D.	Bolt Size * No.	Torque (kg~cm)	Thread Depth
GVB-SS-CF250-P	GB3K311	250	Metal	304	284	M8*32	360	16
GVB-SS-CF275-P	GB3H311	250	Metal	336.5	306.3	M10*30	360	24
GVB-SS-CF300-P	GB3J311	305	Metal	355.6	325.5	M10*30	360	24

Model No.	Parts No.	A	B	C	D	E	F	G	H	L
GVB-SS-CF250-P	GB3K311	106.4	95	114	323	360	505	690	340	1030
GVB-SS-CF275-P	GB3H311	106.4	95	114	323	360	505	690	340	1030
GVB-SS-CF300-P	GB3J311	112.6	105	104	367	415	554	750	361	1111

Dimension in mm unless otherwise noted

All information contained herein was current at time of publication, we reserve the right to change the design/specification for products improvement without notice.

UHV Gate Valve (Ball groove mechanism)

CF Flange

Manual series (With Bellows,Metal Bonnet Seal)

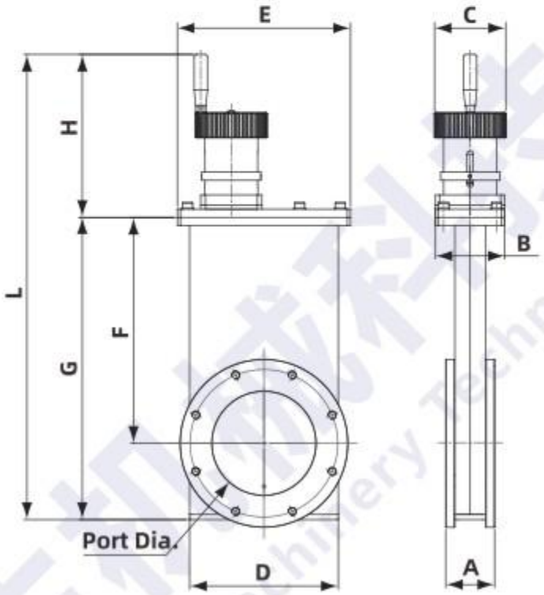

Model No.	Parts No.	Port Dia.	Bonnet seal	Flange O.D.	Bolt P.C.D.	Bolt Size * No.	Torque (kg~cm)	Thread Depth
GVBB-SS-CF63-M	GB3C411	63.7	Metal	113.6	92.1	M8*8	210	18
GVBB-SS-CF100-M	GB3E411	102	Metal	151.6	130.3	M8*16	210	20
GVBB-SS-CF150-M	GB3F411	200	Metal	253.2	181	M8*20	210	22
GVBB-SS-CF200-M	GB3G411	200	Metal	253.2	231.8	M8*24	210	24
GVBB-SA-CF275-M	GB3H411	255	Metal	336.3	306.3	M10*30	360	24

Model No.	Parts No.	A	B	C	D	E	F	G	H	L
GVBB-SS-CF63-M	GB3C411	65	68	70	107	143	158	207	160	367
GVBB-SS-CF100-M	GB3E411	69.6	68	70	146	182	222	297	160	457
GVBB-SS-CF150-M	GB3F411	79	70	78	204	238	306.5	407	183	590
GVBB-SS-CF200-M	GB3G411	84.4	70	78	245	282	382	506	183	689
GVBB-SA-CF275-M	GB3H411	98	75	99	321	360	500	650	340.5	990.5

Dimension in mm unless otherwise noted

All information contained herein was current at time of publication, we reserve the right to change the design/specification for products improvement without notice.

兴生机械科技
XingSheng Machinery Technology

07 GATE VALVE

UHV Gate Valve (Ball groove mechinism)

CF Flange

Pneumatic Series (With Bellows,Metal Bonnet Seal)

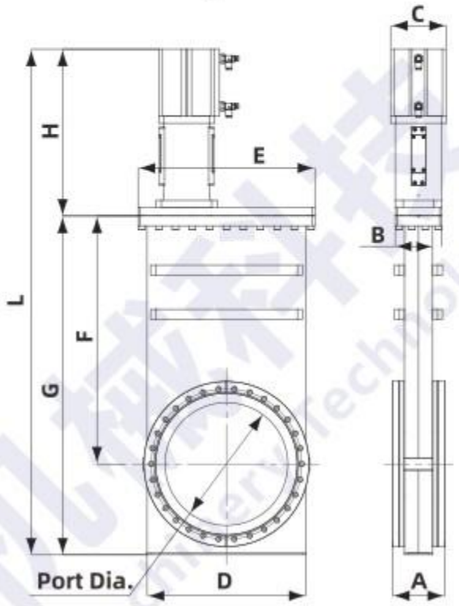

Model No.	Parts No.	Port Dia.	Bonnet seal	Flange O.D.	Bolt P.C.D.	Bolt Size * No.	Torque (kg~cm)	Thread Depth
GVBB-SS-CF63-P	GB3C511	63.7	Metal	113.6	92.1	M8*8	210	18
GVBB-SS-CF100-P	GB3E511	102	Metal	151.6	130.3	M8*16	210	20
GVBB-SS-CF150-P	GB3F511	153	Metal	202.5	181	M8*20	210	22
GVBB-SS-CF200-P	GB3G511	200	Metal	253.2	231.8	M8*24	210	24
GVBB-SA-CF275-P	GB3H511	255	Metal	336.5	306.3	M10*30	360	24

Model No.	Parts No.	A	B	C	D	E	F	G	H	L
GVBB-SS-CF63-P	GB3C511	65	68	62	107	143	158	207	155	362
GVBB-SS-CF100-P	GB3E511	69.6	68	94	146	182	222	297	170	467
GVBB-SS-CF150-P	GB3F511	79	70	94	204	238	306.5	407	198	605
GVBB-SS-CF200-P	GB3G511	84.4	70	94	245	282	382	506	198	704
GVBB-SA-CF275-P	GB3H511	98	75	114	321	360	500	650	282.5	932.5

Dimension in mm unless otherwise noted

All information contained herein was current at time of publication, we reserve the right to change the design/specification for products improvement without notice.

UHV 3 - Position Throttle Gate Valve (Ball groove mechinism)

Features

- Use lockable cylinder, gate plate could precisely stop at alternative position.
- Alternative position is set by reed sensor.
- Good reproducibility of gate plate position, tolerance ±1%.
- Procedure control is programmable and flexible.

Material	Body	304 S.S.
	Carriage	304 S.S.
	Gate	304 S.S.
	Bellows	AM350
Cycle life	size under 4" (included)	100,000
	size above 4"	50,000
Helium leak rates at 1 atm differential	< 5×10^{-10} mbar. l /sec for gasket seal	
Bake Temperature	Open	200°C Viton bonnet seal
	Closed	150°C Viton bonnet seal
Pressure Range (mbar)	1×10^{-10} ~1000	
Maximum P (mbar)	27 before opening	
Standard Seal	Gate	Viton O-ring
	Bonnet	OFHC copper gasket
Actuator	Pneumatic	
Compressed air supply Tube connection Pressure range	Ø6 mm 4~6 Kg/cm^2 (overpressure)	
Surface Treatment	Scotch Polished	
Options	a. Position indicator b. Pneumatic control solenoid valve c. Roughing port d. Other material Gate O-ring seal	

Dimension in mm unless otherwise noted

All information contained herein was current at time of publication, we reserve the right to change the design/specification for products improvement without notice.

兴生机械科技
XingSheng Machinery Technology

07 GATE VALVE

UHV 3 - Position Throttle Gate Valve

CF Flange

Pneumatic Series

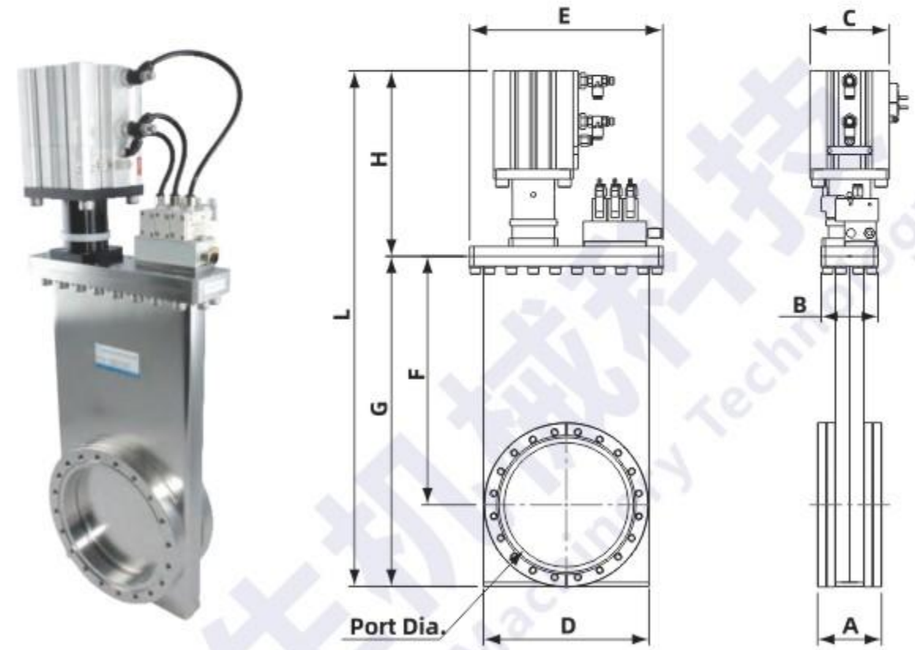

Model No.	Parts No.	Port Dia.	Bonnet seal	Flange O.D.	Bolt P.C.D.	Bolt Size * No.	Torque (kg~cm)	Thread Depth
GVBB3P-SS-CF63-P	GB3C611CB	63.7	Viton	113.6	92.1	M8*8	210	18
GVBB3P-SS-CF100-P	GB3E611CB	102	Viton	151.6	130.3	M8*16	210	20
GVBB3P-SS-CF150-P	GB3F611CB	153	Viton	202.5	181	M8*20	210	22
GVBB3P-SS-CF200-P	GB3G611CB	200	Viton	253.2	231.8	M8*24	210	24

Model No.	Parts No.	A	B	C	D	E	F	G	H	L
GVBB3P-SS-CF63-P	GB3C611CB	65	68	64	107	143	158	207	192	399
GVBB3P-SS-CF100-P	GB3E611CB	69.6	68	98	146	182	222	297	215	512
GVBB3P-SS-CF150-P	GB3F611CB	79	70	98	204	238	306.5	407	229	636
GVBB3P-SS-CF200-P	GB3G611CB	84.4	70	98	245	282	382	506	239	745

Standard voltage DC24V with Solenoid reed sensor

Dimension in mm unless otherwise noted

All information contained herein was current at time of publication, we reserve the right to change the design/specification for products improvement without notice.

HV Gate Valve (Lubricated mechanism)

Material	Body	304 S.S.
	Carriage	304 S.S.
	Gate	304 S.S.
	Bellows	AM350
Cycle life	size under 8" (included)	300,000
	size above 8"	50,000
Helium leak rates at 1 atm differential	< 2×10^{-9} mbar.l /sec for O-ring seal	
Bake Temperature	Valve body	≤ 150°C
	Manual and pneumatic actuator	≤ 80°C
Pressure Range (mbar)	1×10^{-8} ~1000	
Maximum P (mbar)	27 before opening	
Standard Seal	Gate	Viton O-ring
	Bonnet	Viton O-ring
Actuator	Pneumatic or Manual	
Compressed air supply Tube connection Pressure range	Ø6 mm 4~6 Kg/cm^2 (overpressure)	
Surface Treatment	Scotch Polished	
Options	a. Position indicator b. Pneumatic control solenoid valve c. Roughing port d. Other material Gate O-ring seal	

Dimension in mm unless otherwise noted
All information contained herein was current at time of publication, we reserve the right to change the design/specification for products improvement without notice.

兴生机械科技 XingSheng Machinery Technology

07 GATE VALVE

HV Gate Valve (Linkage mechanism)

KF Flange(Mini)

Manual series (with Bellows, Elastomer Bonnet Seal)

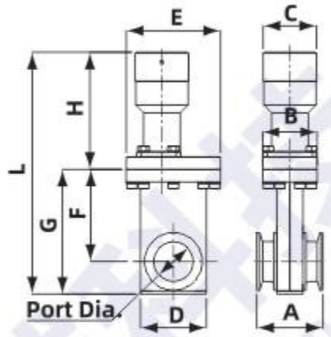

Model No.	Parts No.	Bonnet seal	Flange O.D.	Port Dia.
GVB-SS-KF40-M	GA1A112	Viton	55	38
GVB-SS-KF50-M	GA1B112	Viton	75	50

Model No.	Parts No.	A	B	C	D	E	F	G	H	L
GVB-SS-KF40-M	GA1A112	50	52	51	63	90	88	119	113	232
GVB-SS-KF50-M	GA1B112	59	56	51	81	104	123	167	129	296

KF Flange(Mini)

Pneumatic series (with Bellows, Elastomer Bonnet Seal)

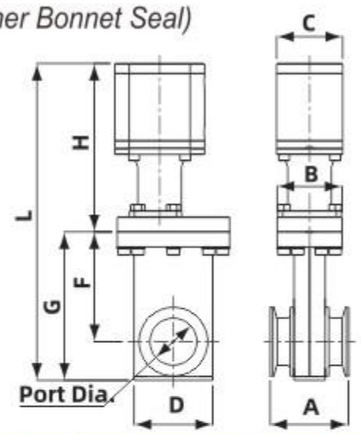

Model No.	Parts No.	Port Dia.	Bonnet seal	Flange O.D.
GVB-SS-KF40-P	GA1A312	38	Viton	55
GVB-SS-KF50-P	GA1B312	50	Viton	75

Model No.	Parts No.	A	B	C	D	E	F	G	H	L
GVB-SS-KF40-P	GA1A312	50	52	53	63	90	88	119	135	254
GVB-SS-KF50-P	GA1B312	59	56	53	81	104	123	167	154	321

Dimension in mm unless otherwise noted
All information contained herein was current at time of publication, we reserve the right to change the design/specification for products improvement without notice.

HV Gate Valve (Linkage mechanism)

ISO Flange(Large)

Pneumatic series (with Bellows, Elastomer Bonnet Seal)

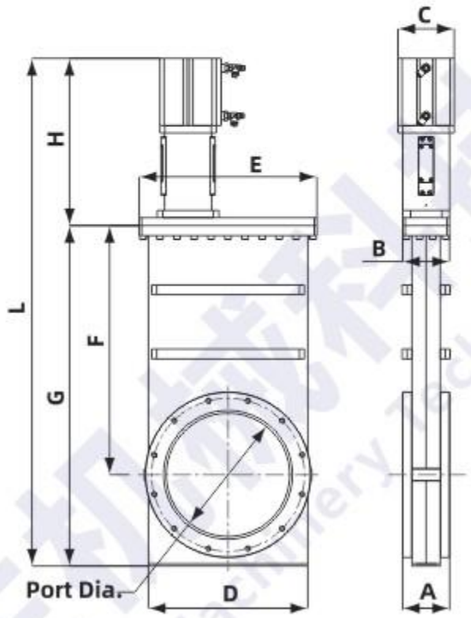

Model No.	Parts No.	Port Dia.	Bonnet seal	Flange O.D.	Bolt P.C.D.	Bolt Size * No.	Torque (kg~cm)	Thread Depth
GVB-SS-ISO250-P	GA4H311	250	Viton	335	310	M10*12	150	19
GVB-SS-ISO320-P	GA4J311	305	Viton	425	395	M12*12	150	20

Model No.	Parts No.	A	B	C	D	E	F	G	H	L
GVB-SS-ISO250-P	GA4H311	95.4	95	114	323	360	505	690	340	1030
GVB-SS-ISO320-P	GA4J311	103.6	105	140	367	415	554	750	361	1111

Dimension in mm unless otherwise noted

All information contained herein was current at time of publication, we reserve the right to change the design/specification for products improvement without notice.

兴生机械科技
XingSheng Machinery Technology

07 GATE VALVE

HV Gate Valve (Ball groove mechanism)

ISO Flange

Manual series

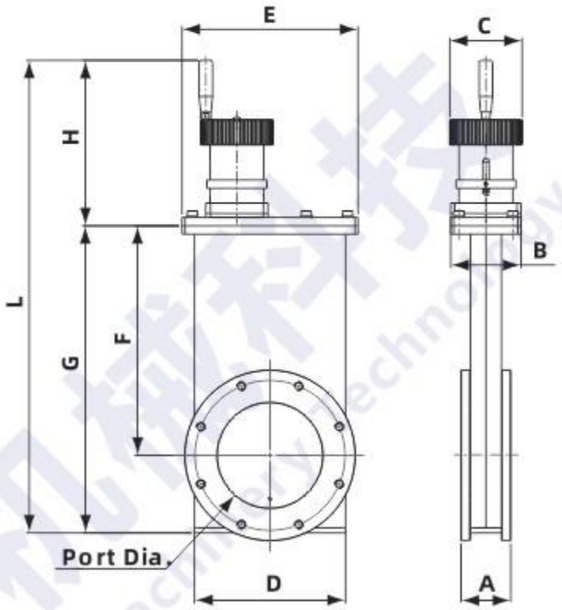

Model No.	Parts No.	Port Dia.	Bonnet seal	Flange O.D.	Bolt P.C.D.	Bolt Size * No.	Torque (kg~cm)	Thread Depth
GVBB-SS-ISO63-M	GA4C411	63.7	Vition	130	110	M8*4	100	12
GVBB-SS-ISO100-M	GA4E411	102	Viton	165	145	M8*8	100	12
GVBB-SS-ISO160-M	GA4F411	153	Vition	225	200	M10*8	100	16
GVBB-SS-ISO200-M	GA4G411	200	Viton	285	260	M10*12	150	16
GVBB-SA-ISO250-M	GA4H411	254	Viton	335	310	M10*12	150	19

Model No.	Parts No.	A	B	C	D	E	F	G	H	L
GVBB-SS-ISO63-M	GA4C411	53	68	70	107	128	158	207	160	367
GVBB-SS-ISO100-M	GA4E411	53.6	68	70	146	170	222	297	160	457
GVBB-SS-ISO160-M	GA4F411	67	68	78	204	220	306.5	407	183	590
GVBB-SS-ISO200-M	GA4G411	67	70	78	245	267	383	507	183	690
GVBB-SA-ISO250-M	GA4H411	80	75	99	321	340	500	650	340.5	990.5

Dimension in mm unless otherwise noted

All information contained herein was current at time of publication, we reserve the right to change the design/specification for products improvement without notice.

HV Gate Valve (Ball groove mechinism)

ISO Flange

Pneumatic series

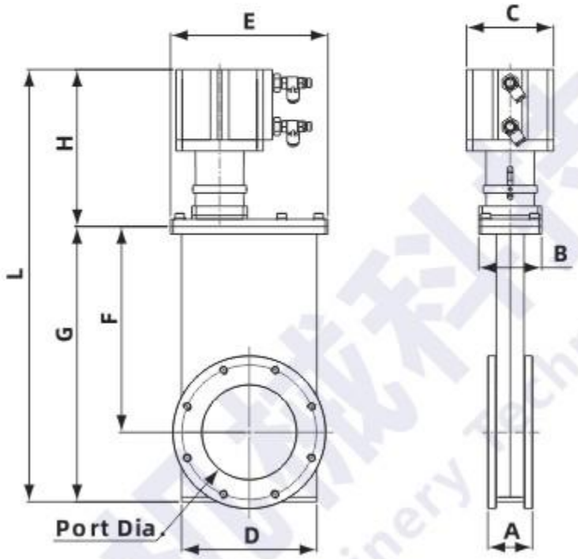

Model No.	Parts No.	Port Dia.	Bonnet seal	Flange O.D.	Bolt P.C.D.	Bolt Size * No.	Torque (kg~cm)	Thread Depth
GVBB-SS-ISO63-P	GA4C511	63.7	Vition	130	110	M8*4	100	12
GVBB-SS-ISO100-P	GA4E511	102	Viton	165	145	M8*8	100	12
GVBB-SS-ISO160-P	GA4F511	153	Vition	225	200	M10*8	100	16
GVBB-SS-ISO200-P	GA4G511	200	Viton	285	260	M10*12	150	16
GVBB-SA-ISO250-P	GA4H511	254	Viton	335	310	M10*12	150	19

Model No.	Parts No.	A	B	C	D	E	F	G	H	L
GVBB-SS-ISO63-P	GA4C511	53	68	62	107	128	158	207	155	362
GVBB-SS-ISO100-P	GA4E511	53.6	68	94	146	170	222	297	170	467
GVBB-SS-ISO160-P	GA4F511	67	68	94	204	220	306.5	407	198	605
GVBB-SS-ISO200-P	GA4G511	67	70	94	245	267	383	507	198	705
GVBB-SA-ISO250-P	GA4H511	80	75	114	321	340	500	650	282.5	932.5

Dimension in mm unless otherwise noted

All information contained herein was current at time of publication, we reserve the right to change the design/specification for products improvement without notice.

兴生机械科技
XingSheng Machinery Technology

HV 3-Position Throttle Gate Valve (Ball groove mechanism)

Features

- Use lockable cylinder, gate plate could precisely stop at alternative position.
- Alternative position is set by reed sensor.
- Good reproducibility of gate plate position, tolerance ±1%.
- Procedure control is programmable and flexible.

Material	Body	304 S.S.
	Carriage	304 S.S.
	Gate	304 S.S.
	Bellows	AM350
Cycle life	size under 8"(included)	300,000
	size above 8"	50,000
Helium leak rates at 1 atm differential	< 2×10^{-9} mbar. l /sec for O-ring	
Bake Temperature	Open	200°C Viton bonnet seal
	Closed	150°C Viton bonnet seal
Pressure Range (mbar)	1×10^{-8}~1000	
Maximum P (mbar)	27 before opening	
Standard Seal	Gate	Viton O-ring
	Bonnet	Viton O-ring
Actuator	Pneumatic	
Compressed air supply Tube connection Pressure range	Ø6 mm 4~6 Kg/cm^2 (overpressure)	
Surface Treatment	Scotch Polished	
Options	a. Position indicator b. Pneumatic control solenoid valve c. Roughing port d. Other material Gate O-ring seal	

Dimension in mm unless otherwise noted

All information contained herein was current at time of publication, we reserve the right to change the design/specification for products improvement without notice.

HV 3-Position Throttle Gate Valve

ISO Flange

Pneumatic series

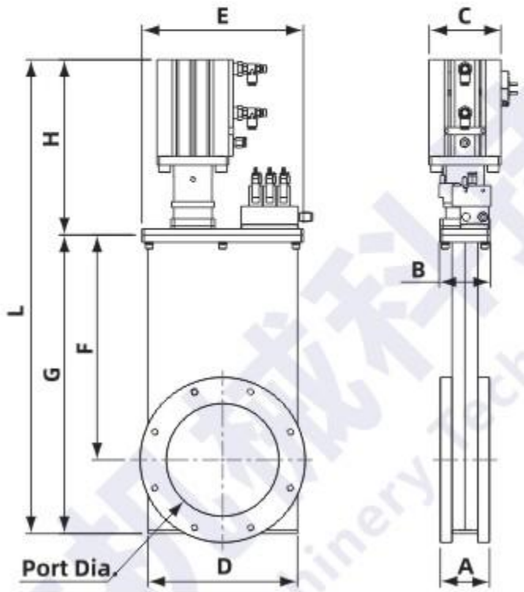

Model No.	Parts No.	Port Dia.	Bonnet seal	Flange O.D.	Bolt P.C.D.	Bolt Size * No.	Torque (kg~cm)	Thread Depth
GVBB3P-SS-ISO63-P	GA4C611CB	63.7	Viton	130	110	M8*4	100	12
GVBB3P-SS-ISO100-P	GA4E611CB	102	Viton	165	145	M8*8	100	12
GVBB3P-SS-ISO160-P	GA4F611CB	153	Viton	225	200	M10*8	100	16
GVBB3P-SS-ISO200-P	GA4G611CB	200	Viton	285	260	M10*12	150	16

Model No.	Parts No.	A	B	C	D	E	F	G	H	L
GVBBV3P-SS-ISO63-P	GA4C611CB	53	68	64	107	128	158	207	192	399
GVBBV3P-SS-ISO100-P	GA4E611CB	53.6	68	98	146	170	222	297	215	512
GVBBV3P-SS-ISO160-P	GA4F611CB	67	68	98	204	220	306.5	407	229	636
GVBBV3P-SS-ISO200-P	GA4G611CB	67	70	98	245	267	383	507	239	746

Standard voltage DC24V with Solenoid & reed sensor.

Dimension in mm unless otherwise noted
All information contained herein was current at time of publication, we reserve the right to change the design/specification for products improvement without notice.

兴生机械科技 XingSheng Machinery Technology

07 GATE VALVE

UHV Gate Valve - Limit Switch

Material	Body		304 S.S.
	Carriage		304 S.S.
	Gate		304 S.S.
	Bellows		AM350
Cycle life	size under 4" (included)		100,000
	size above 4"		50,000
Helium leak rates at 1 atm differential	< 5×10^{-10} mbar. l /sec for gasket seal		
Bake Temperature	Valve body (metal bonnet seal)	Open	200°C
		Closed	150°C
	Actuator	Pneumatic	≤ 80°C
Pressure Range (mbar)	1×10^{-10}~1000		
Maximum P (mbar)	27 before opening		
Standard Seal	Gate		Viton O-ring
	Bonnet		OFHC copper gasket
Compressed air supply tube connection pressure range	Ø6 mm 4~6Kg/cm^2 (overpressure)		
Actuator	Pneumatic		
Connector	D-sub Female 9 pins Current Rating		3A 110VAC
			5A 24VDC
Surface Treatment	Scotch Polished		
Options	a. Pneumatic control solenoid valve b. Roughing port c. Other material Gate O-ring seal		

Wiring

- Pin definition
  1:COM(Close)
  2:N.O(Close)
  3:N.C(Close)
  4:Empty
  5:Empty
  6:COM(Open)
  7:N.O(Open)
  8:N.C(Open)
  9:Empty

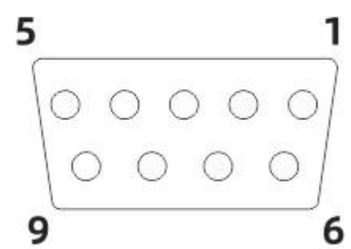

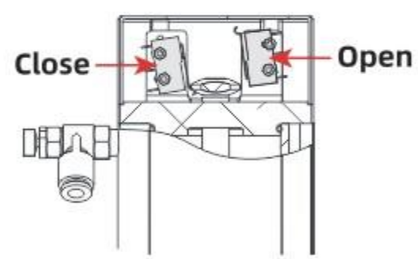

Dimension in mm unless otherwise noted
All information contained herein was current at time of publication, we reserve the right to change the design/specification for products improvement without notice.

UHV Gate Valve (Linkage mechanism)-Limit Switch

CF Flange(Mini)

Pneumatic series (with Bellows, Metal Bonnet Seal)

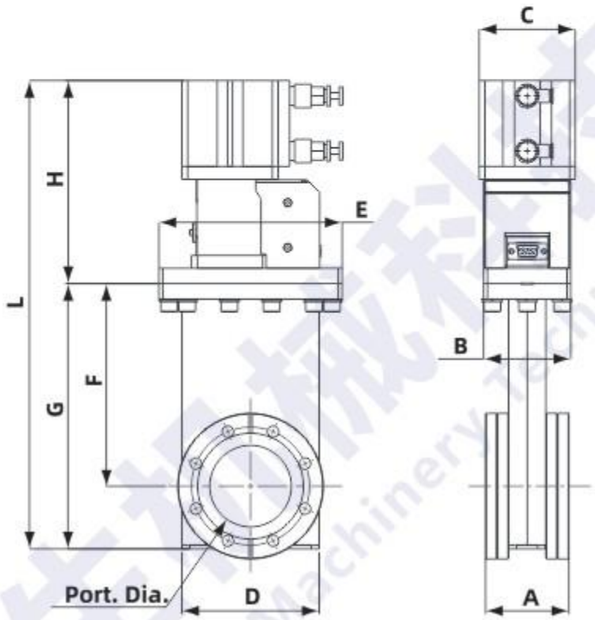

Model No.	Parts No.	Port Dia.	Bonnet seal	Flange O.D.	Bolt P.C.D.	Bolt Size * No.	Torque (kg~cm)	Thread Depth
GVBLS-SS-CF35-P	GB3A311NB	37.5	Metal	69.5	58.7	M6*6	170	10
GVBLS-SS-CF50-P	GB3B311NB	50	Metal	86	72.4	M8*8	210	13

Model No.	Parts No.	A	B	C	D	E	F	G	H	L
GVBLS-SS-CF35-P	GB3A311NB	45.4	52	53	63	90	88	119	166.5	285.5
GVBLS-SS-CF50-P	GB3B311NB	56	56	53	81	104	123	167	185.5	352.5

Dimension in mm unless otherwise noted

All information contained herein was current at time of publication, we reserve the right to change the design/specification for products improvement without notice.

兴生机械科技
XingSheng Machinery Technology

UHV Gate Valve (Linkage mechanism) - Limit Switch

CF Flange(Large)

Pneumatic series (with Bellows, Metal Bonnet Seal)

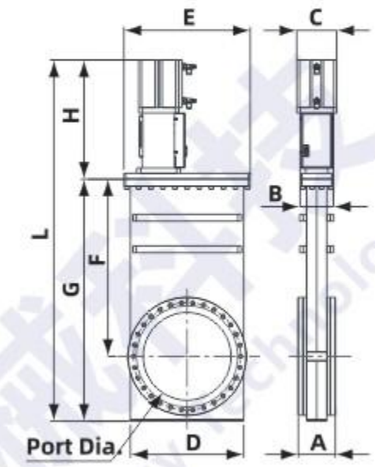

Model No.	Parts No.	Port Dia.	Bonnet seal	Flange O.D.	Bolt P.C.D.	Bolt Size * No.	Torque (kg~cm)	Thread Depth
GVBLS-SS-CF275-P	GB3H311NB	250	Metal	336.5	306.5	M10*30	360	24

Model No.	Parts No.	A	B	C	D	E	F	G	H	L
GVBLS-SS-CF275-P	GB3H311NB	106.4	95	114	323	360	505	690	340	1030

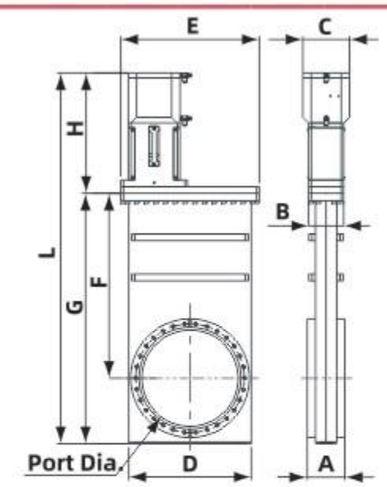

Model No.	Parts No.	Port Dia.	Bonnet seal	Flange O.D.	Bolt P.C.D.	Bolt Size * No.	Torque (kg~cm)	Thread Depth
GVBLS-SS-CF300-P	GB3J311NB	305	Metal	355.6	325.7	M10*30	360	24

Model No.	Parts No.	A	B	C	D	E	F	G	H	L
GVBLS-SS-CF300-P	GB3J311NB	112.6	105	140	367	415	554	750	361	1111

Dimension in mm unless otherwise noted

All information contained herein was current at time of publication, we reserve the right to change the design/specification for products improvement without notice.

UHV Gate Valve (Ball groove mechinism) - Limit Switch

CF Flange

Pneumatic series

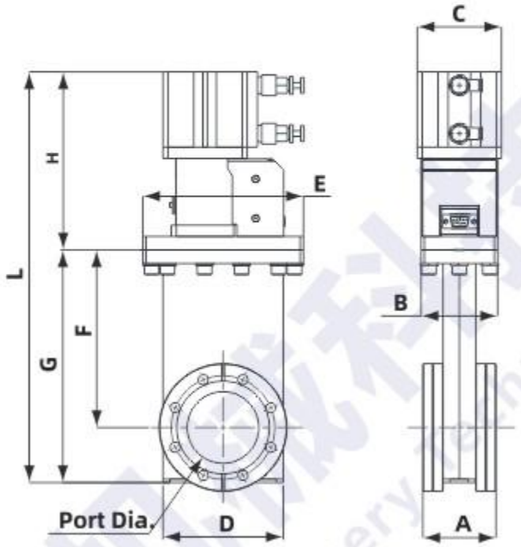

Model No.	Parts No.	Port Dia.	Bonnet seal	Flange O.D.	Bolt P.C.D.	Bolt Size * No.	Torque (kg~cm)	Thread Depth
GVBBLS-SS-CF63-P	GB3C511NB	63.7	Metal	113.6	92.1	M8*8	210	18
GVBBLS-SS-CF100-P	GB3E511NB	102	Metal	151.6	130.3	M8*16	210	20
GVBBLS-SS-CF150-P	GB3F511NB	153	Metal	202.5	181	M8*20	210	22
GVBBLS-SS-CF200-P	GB3G511NB	200	Metal	253.2	231.8	M8*24	210	24

Model No.	Parts No.	A	B	C	D	E	F	G	H	L
GVBBLS-SS-CF63-P	GB3C511NB	65	68	62	107	143	158	207	155	362
GVBBLS-SS-CF100-P	GB3E511NB	69.6	68	94	146	182	222	297	170	467
GVBBLS-SS-CF150-P	GB3F511NB	79	70	94	204	238	306.5	407	198	605
GVBBLS-SS-CF200-P	GB3G511NB	84.4	70	94	245	282	382	506	198	704

Dimension in mm unless otherwise noted

All information contained herein was current at time of publication, we reserve the right to change the design/specification for products improvement without notice.

兴生机械科技
XingSheng Machinery Technology

07 GATE VALVE

HV Gate Valve - Limit switch

(lubricated mechanism)

Material	Body		304 S.S.
	Carriage		304 S.S.
	Gate		304 S.S.
	Bellows		AM350
Cycle life	size under 8" (included)		300,000
	size above 8"		50,000
Helium leak rates at 1 atm differential	< 2×10^{-9} mbar. l /sec for O-ring seal		
Bake Temperature	Valve body	Open	150°C
		Closed	150°C
	Actuator	Pneumatic	≤ 80°C
Pressure Range (mbar)	1×10^{-8}~1000		
Maximum P (mbar)	27 before opening		
Standard Seal	Gate	Viton O-ring	
	Bonnet	Viton O-ring	
Compressed air supply tube connection pressure range	Ø6 mm		
	4~6Kg/cm^2 (overpressure)		
Actuator	Pneumatic		
Connector	D-sub Female 9 pins Current Rating	3A 110VAC	
		5A 24VDC	
Surface Treatment	Scotch Polished		
Options	a. Pneumatic control solenoid valve b. Roughing port c. Other material Gate O-ring seal		

Wiring

- Pin definition
  1:COM(Close)
  2:N.O(Close)
  3:N.C(Close)
  4:Empty
  5:Empty
  6:COM(Open)
  7:N.O(Open)
  8:N.C(Open)
  9:Empty

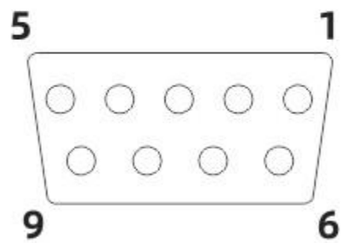

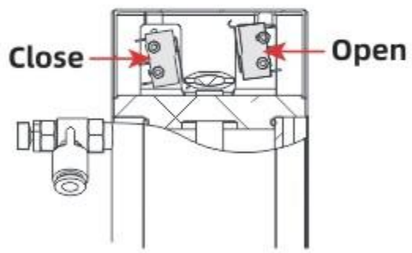

Dimension in mm unless otherwise noted

All information contained herein was current at time of publication, we reserve the right to change the design/specification for products improvement without notice.

HV Gate Valve(Linkage mechanism)-Limit Switch

KF Flange (Mini)

Pneumatic Series (with Bellows, Elastomer Bonnet Seal)

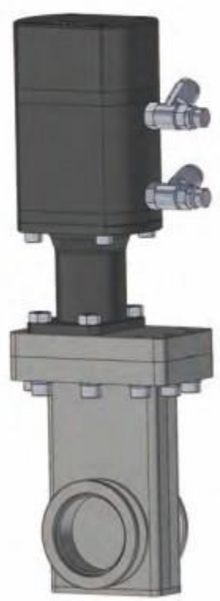

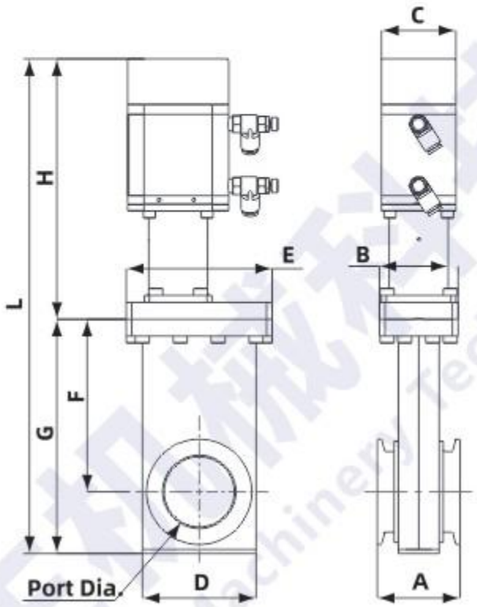

Model No.	Parts No.	Port Dia.	Bonnet seal	Flange O.D.
GVBLS-SS-KF40-P	GA1A312NB	38	Viton	55
GVBLS-SS-KF50-P	GA1B312NB	50	Viton	75

Model No.	Parts No.	A	B	C	D	E	F	G	H	L
GVBLS-SS-KF40-P	GA1A312NB	50	52	53	63	90	88	119	166.5	285.5
GVBLS-SS-KF50-P	GA1B312NB	59	56	53	81	104	123	167	185.5	352.5

Dimension in mm unless otherwise noted

All information contained herein was current at time of publication, we reserve the right to change the design/specification for products improvement without notice.

兴生机械科技
XingSheng Machinery Technology

07 GATE VALVE

HV Gate Valve (Linkage mechanism)-Limit Switch

ISO Flange (Large)

Pneumatic Series (with Bellows, Elastomer Bonnet Seal)

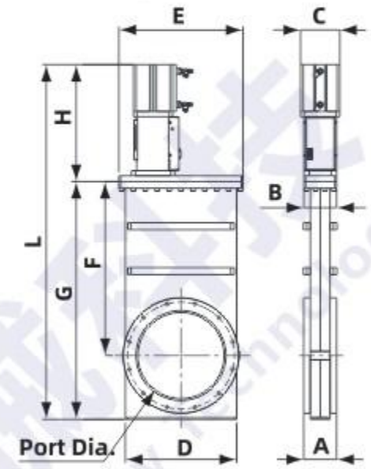

Model No.	Parts No.	Port Dia.	Bonnet seal	Flange O.D.	Bolt P.C.D.	Bolt Size * No.	Torque (kg~cm)	Thread Depth
GVBLS-SS-ISO250-P	GA4H311NB	250	Viton	335	310	M10*12	150	19

Model No.	Parts No.	A	B	C	D	E	F	G	H	L
GVBLS-SS-ISO250-P	GA4H311NB	95.4	95	114	323	360	505	690	340	1030

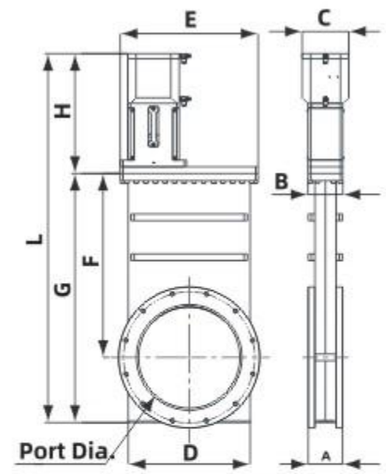

Model No.	Parts No.	Port Dia.	Bonnet seal	Flange O.D.	Bolt P.C.D.	Bolt Size * No.	Torque (kg~cm)	Thread Depth
GVBLS-SS- ISO320-P	GA4J311NB	305	Viton	425	395	M12*12	150	20

Model No.	Parts No.	A	B	C	D	E	F	G	H	L
GVBLS-SS-ISO320-P	GA4J311NB	103.6	105	140	367	415	554	750	361	1111

Dimension in mm unless otherwise noted

All information contained herein was current at time of publication, we reserve the right to change the design/specification for products improvement without notice.

HV Gate Valve (Ball groove mechinism) - Limit Switch

ISO Flange

Pneumatic Series (with Bellows, Elastomer Bonnet Seal)

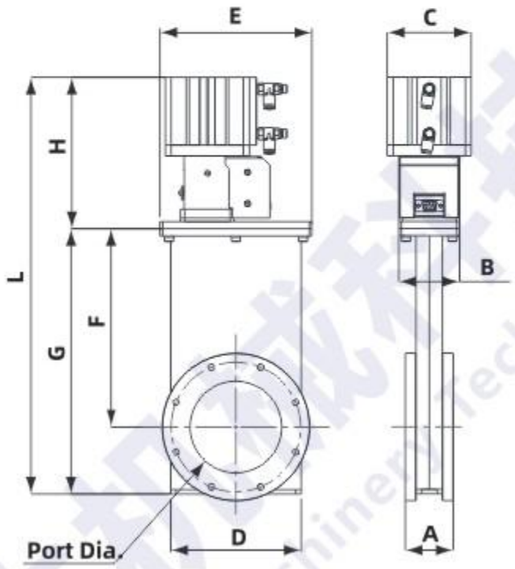

Model No.	Parts No.	Port Dia.	Bonnet seal	Flange O.D.	Bolt P.C.D.	Bolt Size * No.	Torque (kg~cm)	Thread Depth
GVBBLS-SS-ISO63-P	GA4C511NB	63.7	Viton	130	110	M8*4	100	12
GVBBLS-SS-ISO100-P	GA4E511NB	102	Viton	165	145	M8*8	100	12
GVBBLS-SS-ISO160-P	GA4F511NB	153	Viton	225	200	M10*8	100	16
GVBBLS-SS-ISO200-P	GA4G511NB	200	Viton	285	260	M10*12	150	16

Model No.	A	B	C	D	E	F	G	H	L	Parts No.
GVBBLS-SS-ISO63-P	53	68	62	107	128	158	207	155	362	GA4C511NB
GVBBLS-SS-ISO100-P	53.6	68	94	146	170	222	297	170	467	GA4E511NB
GVBBLS-SS-ISO160-P	67	68	94	204	220	306.5	407	198	605	GA4F511NB
GVBBLS-SS-ISO200-P	67	70	94	245	267	383	507	198	705	GA4G511NB

Dimension in mm unless otherwise noted

All information contained herein was current at time of publication, we reserve the right to change the design/specification for products improvement without notice.

兴生机械科技
XingSheng Machinery Technology

07 GATE VALVE

Gate Valve Kit

Spare Parts For 1.5"~12" HV Type

Kit P/N	Content	Figure	For Port Size inches /(MM)
GA1A112K	Gate seal x1-Viton Bonnet seal x1-Viton	1	1.50" / (40)
GA1B112K			2.00" / (50)
GA4C111K			2.50" / (63)
GA4E111K			4.00" / (100)
GA4F111K			6.00" / (160)
GA4G111K			8.00" / (200)
GA4H111K			10.0" / (250)
GA4J111K			12.0" / (320)

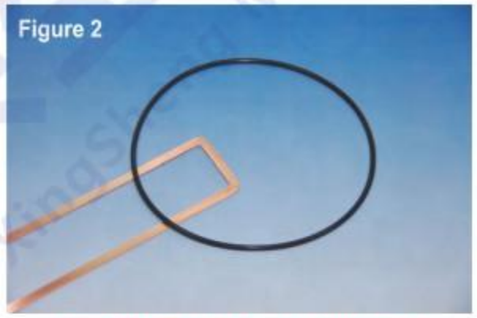

Spare Parts For 1.5"~12" UHV Type

Kit P/N	Content	Figure	For Port Size inches /(MM)
GB3A111K	Gate seal x1-Viton Bonnet seal x 1-OFHC Copper	2	1.50" / (35)
GB3B111K			2.00" / (50)
GB3C111K			2.50" / (63)
GB3E111K			4.00" / (100)
GB3F111K			6.00" / (150)
GB3G111K			8.00" / (200)
GB3H111K			10.0" / (250)
GB3J111K			12.0" / (300)

Dimension in mm unless otherwise noted

All information contained herein was current at time of publication, we reserve the right to change the design/specification for products improvement without notice.

HV Aluminum Gate Valve

Specification

- Model : ISO-F 250 GV
- Pressure Range:10^{-7} mbar to 1 bar
- Leak rate : <$2x10^{-8}$ mbar. l/sec
- Differential pressure on the plate: ≤1 bar
- Differential pressure at opening: ≤30 mbar
- Material:
  Top valve body : 304S.S.
  Bottom valve body : 6061-T6 aluminum
  Shaft : 304S.S.
  Carriage : 6061-T6 aluminum
  Bonnet / gate / shaft seals : Viton
- Max temperature : Cylinder ≤ 80°C
- Body ≤ 120°C
- Compressed air : 4-7 bar
- Compressed air connection : M5
- Mounting position : Any
- Conductance : 22,000 l/s
- Closing time : 5.0 s
- Opening time : 5.0 s
- Cycle until first service : 100,000
- Weight : 27.0 Kg

HV TYPE

Aluminum Body, without bellows

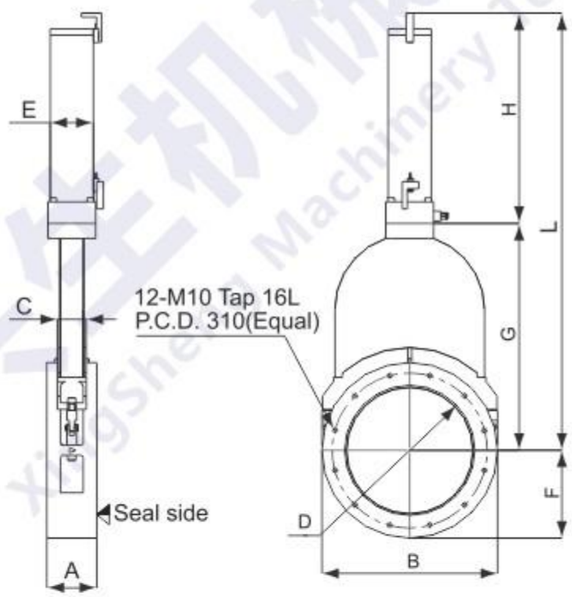

Model No.	Parts No.	Sensor	A	B	C	D	E	F	G	H	L
GVS-AL-ISO250-P	G14H511NA	YES	100	Ø352	58.5	261	86	176	455	422	877

Accessory	Description	Parts No.
Solenoid (Optional)	DC24V AC110V VAC220V	1000C0F202 1000C0F203 1000C0F204
Sensor (Standard)	DC4-24(V) or AC4-240(V), 5-40 mA	60010021

Dimension in mm unless otherwise noted
All information contained herein was current at time of publication, we reserve the right to change the design/specification for products improvement without notice.

兴生机械科技
XingSheng Machinery Technology

07 GATE VALVE

Pendulum valves

Htc vacuum pendulum valve is to install a large throttle valve between the process vacuum chamber and the turbine molecular pump inlet. The current pendulum valve design are constructed of Nickel plating or hard anodized for corrosion resistant and less dust. It's vailable with ISO 250 flanges in sizes 10" and can be operated in pneumatic or APC mode. This vacuum valve is usually designed as a gate valve or a pendulum valve, applications include OLED, FPD, and PV industries manufacturing systems.

Pneumatic pendulum valve

Design principle / features :

- Low Vibration
- Easy disassembly
- Corrosion resistant
- More Differential pressure
- Less dust

Material	Body	A6061-T6
	Gate	A6061-T6
Cycle life	200,000 cycles	
Helium leak rates at 1 atm differential	Body Aluminum ,nickel plated	<1×10^{-9} mbar .l /sec
	Body Aluminum ,hard anodized	<1×10^{-5} mbar .l /sec
Bake Temperature	Body	≤ 120°C
	Actuator	≤ 80°C
	Solenoid valve	≤ 50°C
Pressure Range	Nickel plated	1×10^{-8} mbar to 1.2 bar
	Hard anodized	1×10^{-6} mbar to 1.2 bar
Maximum P	2 bar	
Maximum P during opening	≤ 5 mbar	
Compressed air pressure	4 ~ 6 Kg/cm^2	
Opening / Closing time	4 / 4 sec	
Standard Seal	Gate	Viton O-ring
	Bonnet	Viton O-ring
Actuator	Electro-Pneumatic	
Weight	ISO-200	25 kg
	ISO-250	33 kg
Mounting position	Horizontal(cylinder up) & vertical	
Options	a. Other material of Gate O-ring seal b. Heater	

Dimension in mm unless otherwise noted
All information contained herein was current at time of publication, we reserve the right to change the design/specification for products improvement without notice.

Pneumatically Actuated

Attached Reed Sensor & Solenoid

Nickel plated

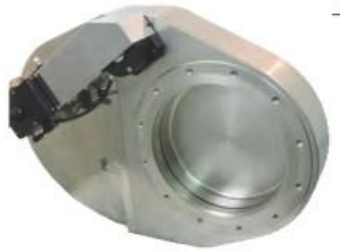

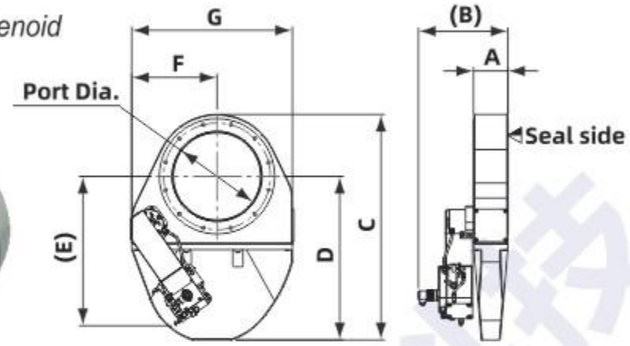

Model No.	Parts No.	Port Dia.	Bonnet seal	Flange O.D.	Bolt P.C.D.	Bolt Size * No.	Thread Depth
PVSSV-A-ISO200-P	GP1131212CB	200	Viton	285	260	M10*12	12
PVSSV-A-ISO250-P	GP1141212CB	254	Viton	355	310	M10*12	15

Model No.	Parts No.	A	B	C	D	E	F	G
PVSSV-A-ISO200-P	GP1131212CB	88	248	536	386	411	202	394
PVSSV-A-ISO250-P	GP1141212CB	100	260	655	475	434	248	467

Standard Surface Treatment : nickel plated

With reed sensors, with standard solenoid voltage DC24V

Pneumatically Actuated

Attached Reed Sensor & Solenoid

Hard anodized

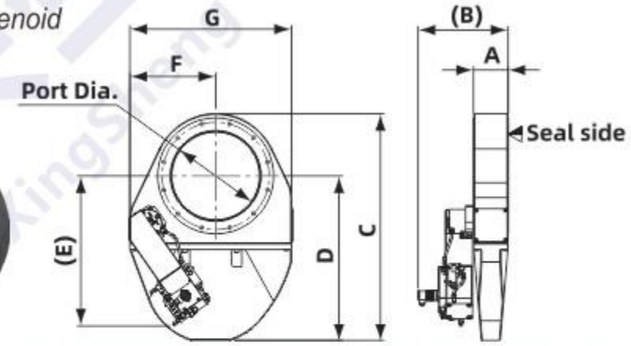

Model No.	Parts No.	Port Dia.	Bonnet seal	Flange O.D.	Bolt P.C.D.	Bolt Size * No.	Thread Depth
PVSSV-HA-ISO200-P	GP1131213CB	200	Viton	285	260	M10*12	12
PVSSV-HA-ISO250-P	GP1141213CB	254	Viton	335	310	M10*12	15

Model No.	Parts No.	A	B	C	D	E	F	G
PVSSV-HA-ISO200-P	GP1131213CB	88	248	536	386	411	202	394
PVSSV-HA-ISO250-P	GP1141213CB	100	260	655	475	434	248	467

Surface Treatment : hard anodized

With reed sensors, with standard solenoid voltage DC24V

Dimension in mm unless otherwise noted

All information contained herein was current at time of publication, we reserve the right to change the design/specification for products improvement without notice.

兴生机械科技
XingSheng Machinery Technology

07 GATE VALVE

3-Position Pendulum valves

Material	Body	A6061-T6
	Gate	A6061-T6
Cycle life	200,000 cycles	
Helium leak rates at 1 atm differential	Body Aluminum ,nickel plated	$<1\times10^{-9}$ mbar .l /sec
	Body Aluminum ,hard anodized	$<1\times10^{-5}$ mbar .l /sec
Bake Temperature	Body	≤ 120°C
	Actuator	≤ 80°C
	Solenoid valve	≤ 50°C
Pressure Range	Nickel plated	1×10^{-8} mbar to 1.2 bar
	Hard anodized	1×10^{-6} mbar to 1.2 bar
Maximum P	2 bar	
Maximum P during opening	≤ 5 mbar	
Compressed air pressure	4 ~ 6 Kg/cm^2	
Opening / Closing time	4 / 4 sec	
Standard Seal	Gate	Viton O-ring
	Bonnet	Viton O-ring
Actuator	Pneumatic and Manual	
Weight	35 Kg	
Mounting position	Horizontal(cylinder up) or vertical	
Options	a. Other material of Gate O-ring seal	b. Heater

Dimension in mm unless otherwise noted

All information contained herein was current at time of publication, we reserve the right to change the design/specification for products improvement without notice.

Pneumatically Actuated

Attached Reed Sensor

Nickel plated

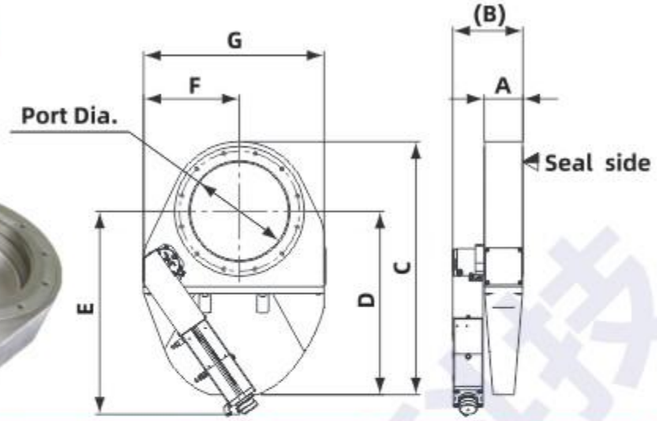

Model No.	Parts No.	Port Dia.	Bonnet seal	Flange O.D.	Bolt P.C.D.	Bolt Size * No.	Thread Depth
PV3P-A-ISO250-P	GP1143212NA	254	Viton	335	310	M10*12	15

Model No.	Parts No.	A	B	C	D	E	F	G
PV3P-A-ISO250-P	GP1143212NA	100	201	655	475	525	248	467

Standard Surface Treatment : nickel plated

With reed sensors

Pneumatically Actuated

Attached Reed Sensor

Hard anodized

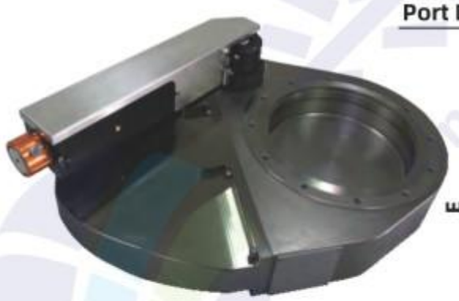

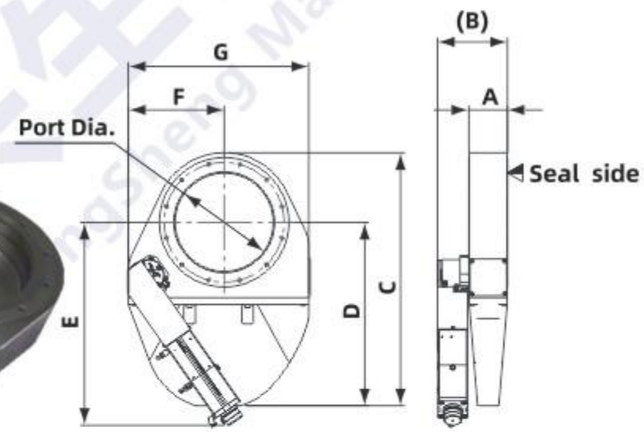

Model No.	Parts No.	Port Dia.	Bonnet seal	Flange O.D.	Bolt P.C.D.	Bolt Size * No.	Thread Depth
PV3P-HA-ISO250-P	GP1143213NA	254	Viton	335	310	M10*12	15

Model No.	Parts No.	A	B	C	D	E	F	G
PV3P-HA-ISO250-P	GP1143213NA	100	201	655	475	525	248	467

Surface Treatment : hard anodized

With reed sensors

Dimension in mm unless otherwise noted
All information contained herein was current at time of publication, we reserve the right to change the design/specification for products improvement without notice.

兴生机械科技
XingSheng Machinery Technology

07 GATE VALVE

APC Pendulum valves

Main applications

Downstream pressure control and isolation valve.

Application process

- SEMI • FPD • Solar • CVD

Features

- Integrated pressure controller
- Accurate pressure control
- Compact isolation
- Short response time
- Friendly user interface

APC pendulum valve gate system settings

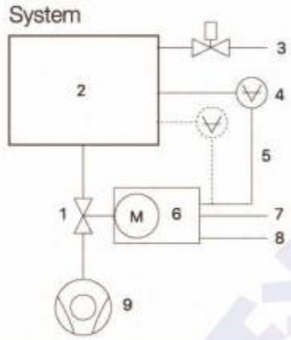

1. Valve
2. Process chamber
3. Gas inlet
4. Pressure sensor(s)
5. Sensor cable(s)
6. Controller and actuator
7. Cable to remote control unit
8. Cable to power supply
9. Pump

Actuator unit with controller				
Power consumption	+ 24 V DC (±10%)			
	100 W max. (controller + motor)			
	10 W max. for Power Failure Option			
	36 W max. for Sensor Power Supply			
Throttling Cycle	200,000			
Sensor supply	24 V DC or ±15 V DC			
Sensor Input	Signal voltage	0 - 10 V DC linear with pressure		
	Input resistance	Ri = 100kΩ		
	Resolution	2.3 mV		
	Sampling rate	1 ms		
Control accuracy	0.1% of maximum sensor range			
Position resolution	≥ 8000			
Ambient temperature	50°C max			
Material	Body	A6061-T6		
	Gate	A6061-T6		
Cycle Life	Closing / Opening	200,000		
	Pressure Control	1,000,000		
Helium leak rates at 1 atm differential	Body Aluminum, nickel plated	$<1\times10^{-9}$ mbar. l /sec		
	Body Aluminum ,hard anodized	$<1\times10^{-5}$ mbar. l /sec		
Bake Temperature	Body	≤ 120°C		
Pressure Range	Nickel plated	1×10^{-8} mbar to 1.2 bar		
	Hard anodized	1×10^{-6} mbar to 1.2 bar		
Maximum P	2 bar			
Compressed air pressure	4 ~ 6 Kg/cm^2			
Opening / Closing time without isolation	ISO 200	1.6 / 1.6 sec		
	ISO 250	2 / 2 sec		
Standard Seal	Gate	Viton O-ring		
	Bonnet	Viton O-ring		
Actuator	Step Motor			
Weight	ISO 200	25 Kg	ISO 250	36 kg
Mounting position	Horizontal(Cylinder Up) & vertical			
Options	a. Other material of Gate O-ring Seal b. Heater			

Dimension in mm unless otherwise noted
All information contained herein was current at time of publication, we reserve the right to change the design/specification for products improvement without notice.

	Connection	Type
Power	Power input	DB-9 male
Sensor	Sensor input Sensor power supply	DB-15 female
Interface	RS232/RS485	DB-25 female
Service	APC service	Mini USB type B female

Connect Port

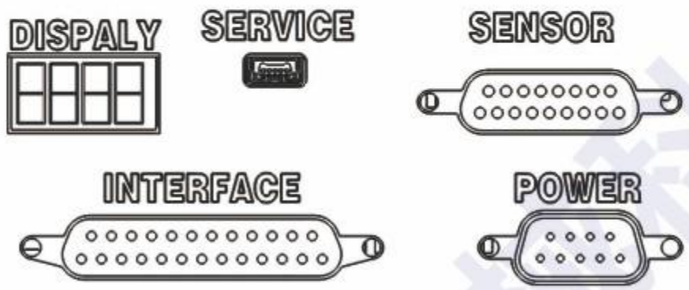

APC software functions

Control via computer by using the APC software offers convenient functions

- Set control tuning parameter : GAIN
- Pressure and position control mode
- Schedule test Mode => 1 cycle schedule
- Set valve open/close speed
- Report APC HW/SW version, serial and model number
- Report valve cycles and run hours
- Set tolerance scope of pressure
- Cycles life and pressure control record
- Controller parameter upload and download
- Power failure protection
- Screen Capture

Dimension in mm unless otherwise noted

All information contained herein was current at time of publication, we reserve the right to change the design/specification for products improvement without notice.

兴生机械科技 XingSheng Machinery Technology

07 GATE VALVE

APC Pendulum Valve

Control System

Nickel plated

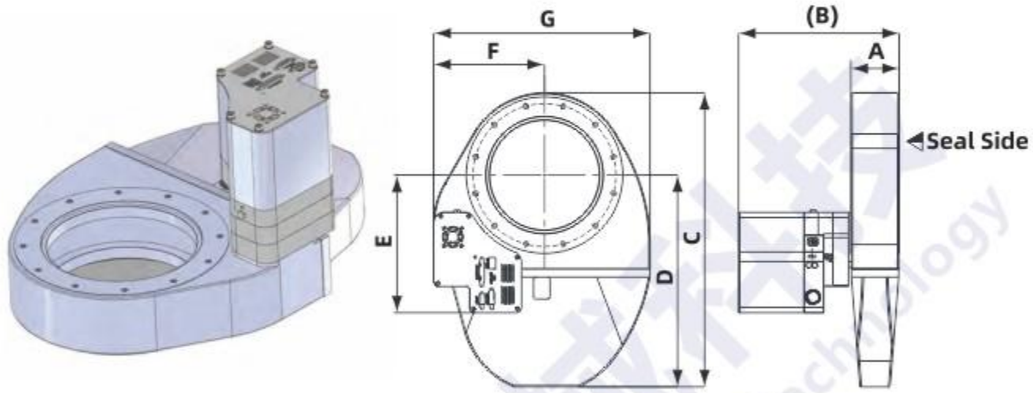

Model No.	Parts No.	Port Dia.	Bonnet seal	Flange O.D.	Bolt P.C.D.	Bolt Size * No.	Thread Depth
PVSSV-A-ISO200-C	GP1132212PA	200	Viton	285	260	M10*12	12

Model No.	Parts No.	A	B	C	D	E	F	G
PVSSV-A-ISO200-C	GP1132212PA	88	293	536	386	251	202	394

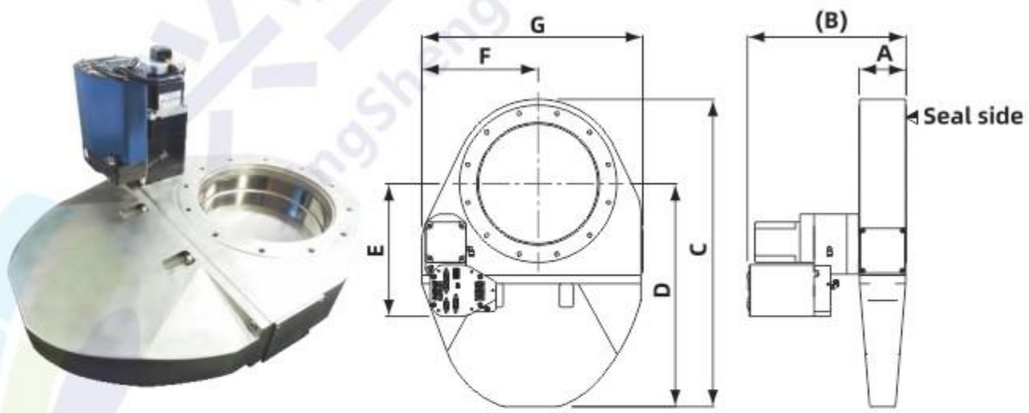

Model No.	Parts No.	Port Dia.	Bonnet seal	Flange O.D.	Bolt P.C.D.	Bolt Size * No.	Thread Depth
PVSSV-A-ISO250-C	GP1142212PA	254	Viton	335	310	M10*12	15

Model No.	Parts No.	A	B	C	D	E	F	G
PVSSV-A-ISO250-C	GP1142212PA	100	338	655	475	283	248	470

Standard Surface Treatment : nickel plated

Dimension in mm unless otherwise noted

All information contained herein was current at time of publication, we reserve the right to change the design/specification for products improvement without notice.

APC PENDULUM VALVE

Control System

Hard anodized

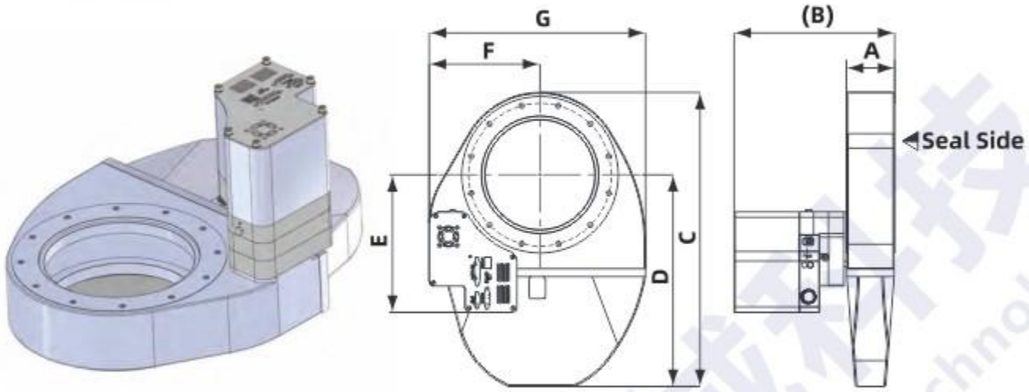

Model No.	Parts No.	Port Dia.	Bonnet seal	Flange O.D.	Bolt P.C.D.	Bolt Size * No.	Thread Depth
PVSSV-HA-ISO200-C	GP1132213PA	200	Viton	285	260	M10*12	12

Model No.	Parts No.	A	B	C	D	E	F	G
PVSSV-HA-ISO200-C	GP1132213PA	88	293	536	386	251	202	394

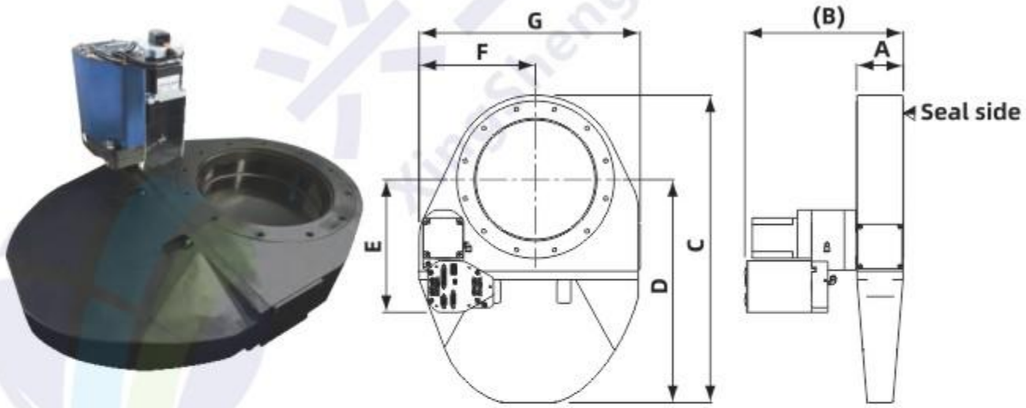

Model No.	Parts No.	Port Dia.	Bonnet seal	Flange O.D.	Bolt P.C.D.	Bolt Size * No.	Thread Depth
PVSSV-HA-ISO250-C	GP1142213PA	254	Viton	335	310	M10*12	15

Model No.	Parts No.	A	B	C	D	E	F	G
PVSSV-HA-ISO250-C	GP1142213PA	100	338	655	475	283	248	470

Standard Surface Treatment : Hard anodized

Dimension in mm unless otherwise noted

All information contained herein was current at time of publication, we reserve the right to change the design/specification for products improvement without notice.

兴生机械科技
XingSheng Machinery Technology

07 GATE VALVE

Transfer valves and doors

Htc vacuum rectangular valves use directly actuating technology. Valve body is appropriate size and compact design. All moving parts are located in atmospheric side that could reduce the particle occur in vacuum side and raise the life cycle. Other advantages include self-lock of gate seal upon air pressure loss, easy gate disassembly for maintenance etc.

Vacuum rectangular transfer valves are used widely in coaters of semiconductor, optoelectronics industry. Most of the valves are installed on load-lock chamber, between load-lock chamber and transfer chamber, also transfer chamber and process chamber. Enable transferring and processing being isolated for vacuum by the valves.

Example of vacuum rectangular valves install on cluster chamber

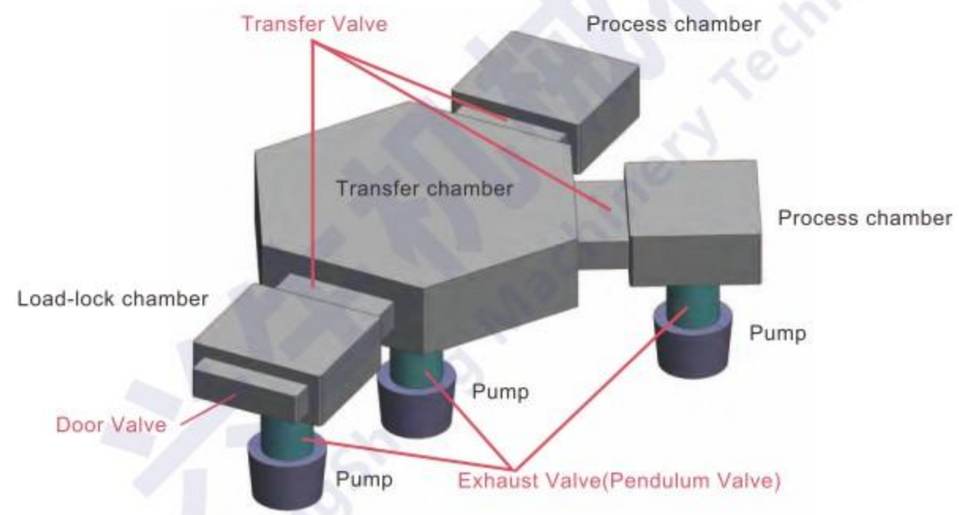

Design principle / feature

- Low vibration and low particles.
- Cam mechanism and spring enable sealing motion.
- Twin air-cylinders, single forcing shaft.
- Actuator shaft push auxiliary.
- Self-lock seal protection upon air pressure loss.
- Seal gate quick dismantling, easy for O-ring change.
- One million life cycles.

Classify

- Standard Rectangular Transfer valves
- Rectangular doors
- Large rectangular transfer valves
- Large rectangular doors

Body material

- Aluminum or Stainless Steel

Body Surface treatment

- Electrolytic polishing : Aluminum or Stainless Steel
- Hard anodized : Aluminum

Dimension in mm unless otherwise noted

All information contained herein was current at time of publication, we reserve the right to change the design/specification for products improvement without notice.

Rectangular transfer valve

Pneumatic (with bellows)

Electrolytic polishing

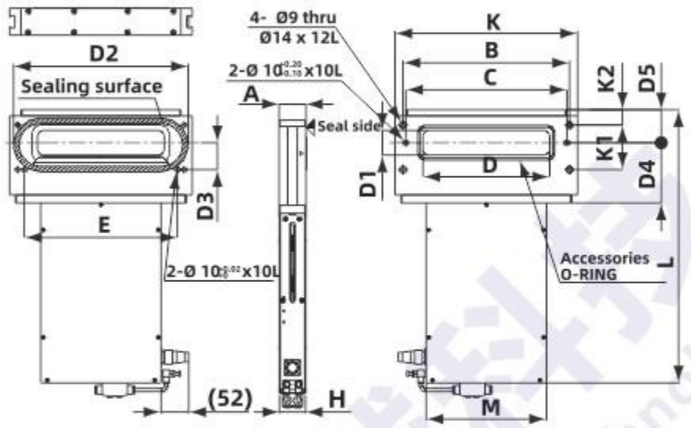

Model No.	Parts No.	Body	Gate	Actuated time	Gate seal	Cycle Life	Weight
GRB-A-32222	GR01A213	A6061-T6	A6061-T6	open<=1 close<=1	Viton	1 million	15kg
GRB-A-46236	GR02A213	A6061-T6	A6061-T6	open<=1 close<=1	Viton	1 million	16kg
GRB-A-50336	GR03A213	A6061-T6	A6061-T6	open<=1 close<=1	Viton	2 million	21kg
GRB-A-56496	GR04A213	A6061-T6	A6061-T6	open<=2 close<=3.5	Viton	1 million	29kg
GRB-S-32222	GR01A113	304S.S.	304S.S.	open<=1 close<=1	Viton	1 million	20kg
GRB-S-46236	GR02A113	304 S.S.	304 S.S.	open<=1 close<=1	Viton	1 million	22kg
GRB-S-50336	GR03A113	304 S.S.	304 S.S.	open <=1 close<=1	Viton	2 million	34kg
GRB-S-56496	GR04A113	304 S.S.	304 S.S.	open<=2 close<=3.5	Viton	1 million	49kg

Model No.	Parts No.	D	D1	D2	D3	D4	D5	A	B	C	E	H	K	K1	K2	L	M
GRB-A-32222	GR01A213	222	32	311	50	105	61.5	50	310	300	285	49	340	83	28.5	501.5	224
GRB-A-46236	GR02A213	236	46	325	50	112	61.5	50	310	300	285	49	340	83	28.5	508.5	224
GRB-A-50336	GR03A213	336	50	422	50	112	63	60	410	400	385	59	440	83	30	475	250
GRB-A-56496	GR04A213	496	56	540	61	117.5	66	70	570	560	545	69	600	94	33	513.5	282
GRB-S-32222	GR01A113	222	32	311	50	105	61.5	50	310	300	285	49	340	83	28.5	501.5	224
GRB-S-46236	GR02A113	236	46	325	50	112	61.5	50	310	300	285	49	340	83	28.5	508.5	224
GRB-S-50336	GR03A113	336	50	422	50	112	63	60	410	400	385	59	440	83	30	475	250
GRB-S-56496	GR04A113	496	56	540	61	117.5	66	70	570	560	545	69	600	94	33	513.5	282

Dimension in mm unless otherwise noted

All information contained herein was current at time of publication, we reserve the right to change the design/specification for products improvement without notice.

兴生机械科技
XingSheng Machinery Technology

07 GATE VALVE

Rectangular transfer valve Technical Data (for Electrolytic polishing valve boby)

Spindle sealing	Bellows	
Leak rates	Body	1 x 10^{-9} mbar.l/s
	Seat	1 x 10^{-9} mbar.l/s
Surface Treatment (Body)	Electrolytic polishing	
Bakeable Temperature	Body	<90°C
	Driving module	<60°C
Differential pressure on the gate (Note *)	Forward pressure difference	≤ 1.2 bar
	Reverse pressure difference	≤ 1.0 bar
Differential pressure at opening (Note**)	<10 mbar	
Pressure Range	1* 10^{-8} mbar to 1.0 bar	
Driving pressure	5~7 Kg/cm^2	
Compressed air connection	Ø 6 mm	
Standard Seal	Gate	Viton O'ring
Position sensor (Standard)	DC4-24(V) or AC4-240(V), 5-40 mA	
Solenoid (Optional)	DC24(V) ,AC24(V),AC110(V),AC220(V)	
Mounting position	Actuator up, down	

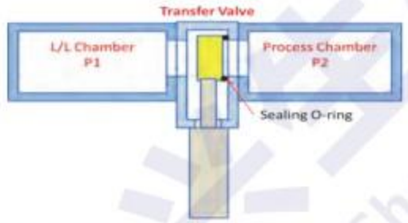

Note :

* Differential pressure on the gate
Forward and reverse pressure difference definitions:
Forward pressure difference (P1 > P2) = P1-P2
Reverse pressure difference (P1 < P2) = P2-P1

** Differential pressure at opening = P1 – P2 < 10 mbar

Accessories :

32x222 M8x50L
46x236 M8x50L
50x336 M8x60L
46x496 M8x70L

PIN

Ø10x15L

Clamp single clamp AL
Part No:2121A211

Fixture for maintenance
Part No: GR03A213323

Dimension in mm unless otherwise noted

All information contained herein was current at time of publication, we reserve the right to change the design/specification for products improvement without notice.

Rectangular transfer valve

Pneumatic (with bellows)

Hard anodized

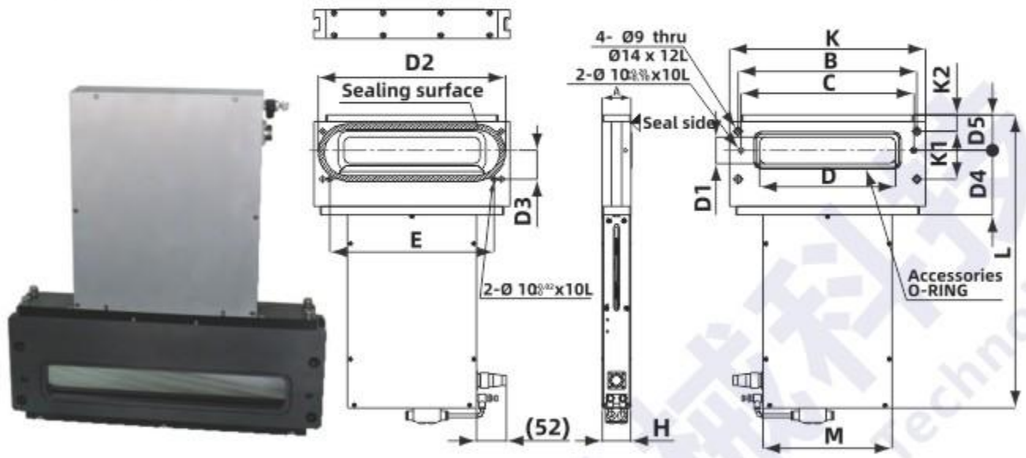

Model No.	Parts No.	Body	Gate	Actuated time	Gate seal	Cycle Life	Weight
GRB-HA-32222	GR01A713	A6061-T6	A6061-T6	open<=1 close<=1	Viton	1 million	15kg
GRB-HA-46236	GR02A713	A6061-T6	A6061-T6	open<=1 close<=1	Viton	1 million	16kg
GRB-HA-50336	GR03A713	A6061-T6	A6061-T6	open<=1 close<=1	Viton	2 million	21kg
GRB-HA-56496	GR04A713	A6061-T6	A6061-T6	open<=2 close<=3.5	Viton	1 million	29kg

Model No.	Parts No.	D	D1	D2	D3	D4	D5	A	B	C	E	H	K	K1	K2	L	M
GRB-HA-32222	GR01A713	222	32	311	50	105	61.5	50	310	300	285	49	340	83	28.5	501.5	224
GRB-HA-46236	GR02A713	236	46	325	50	112	61.5	50	310	300	285	49	340	83	28.5	508.5	224
GRB-HA-50336	GR03A713	336	50	422	50	112	63	60	410	400	385	59	440	83	30	475	250
GRB-HA-56496	GR04A713	496	56	540	61	117.5	66	70	570	560	545	69	600	94	33	513.5	282

Dimension in mm unless otherwise noted

All information contained herein was current at time of publication, we reserve the right to change the design/specification for products improvement without notice.

兴生机械科技
XingSheng Machinery Technology

07 GATE VALVE

Rectangular transfer valve Technical Data (for hard anodized valve boby)

Spindle sealing	Bellows	
Leak rates	Body	5 x 10^{-6} mbar.l/s
	Seat	5 x 10^{-5} mbar.l/s
Surface Treatment (Body)	Hard anodized	
Bakeable Temperature	Body	<90°C
	Driving module	<60°C
Differential pressure on the gate (Note *)	Forward pressure difference	≤ 1.2 bar
	Reverse pressure difference	≤ 1.0 bar
Differential pressure at opening (Note**)	<10 mbar	
Pressure Range	1* 10^{-6} mbar to 1.0 bar	
Driving Pressure	5~7 Kg/cm^2	
Compressed air connection	Ø 6 mm	
Standard Seal	Gate	Viton O'ring
Position sensor (Standard)	DC4-24(V) or AC4-240(V), 5-40 mA	
Solenoid (Optional)	DC24(V) ,AC24(V),AC110(V),AC220(V)	
Mounting position	Actuator up, down	

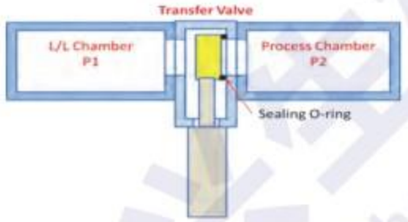

Note :

* Differential pressure on the gate
Forward and reverse pressure difference definitions:
Forward pressure difference (P1 > P2) = P1-P2
Reverse pressure difference (P1 < P2) = P2-P1

** Differential pressure at opening = P1 – P2 < 10 mbar

32x222 M8x50L
46x236 M8x50L
50x336 M8x60L
46x496 M8x70L

PIN
Ø10x15L

Clamp single
clamp AL
Part No:2121A211

Fixture for maintenance
Part No:GR03A213323

Dimension in mm unless otherwise noted

All information contained herein was current at time of publication, we reserve the right to change the design/specification for products improvement without notice.

Rectangular doors valve

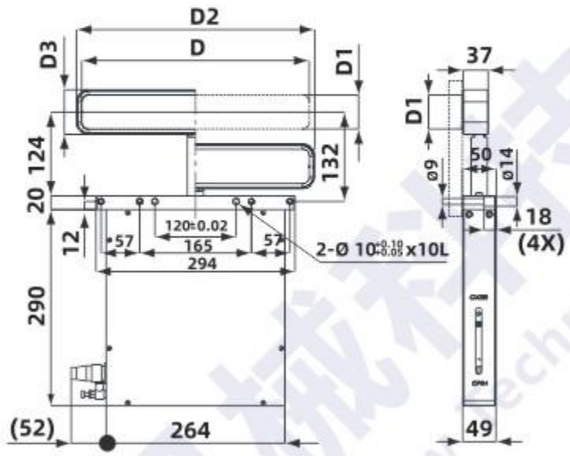

Model No.	Parts No.	Gate	D	D1	D2	D3	Actuated time	Gate seal	Weight (Kg)
GR-A-32222-D	GR014514	A6061-T6	222	32	239	48	open<=1 close<=1	Viton	9kg
GR-A-46236-D	GR024514	A6061-T6	236	46	253	62	open<=1 close<=1	Viton	9.5kg
GR-A-50336-D	GR034514	A6061-T6	336	50	352	66	open<=1 close<=1	Viton	10kg
GR-A-56496-D	GR044514	A6061-T6	496	56	512	72	open<=2 close<=2	Viton	11.5kg
GR-S-32222-D	GR014614	304S.S	222	32	239	48	open<=1 close<=1	Viton	11kg
GR-S-46236-D	GR024614	304S.S	236	46	253	62	open<=1 close<=1	Viton	12kg
GR-S-50336-D	GR034614	304S.S	336	50	352	66	open<=1 close<=1	Viton	14kg
GR-S-56496-D	GR044614	304S.S	496	56	512	72	open<=2 close<=2	Viton	18kg

Dimension in mm unless otherwise noted

All information contained herein was current at time of publication, we reserve the right to change the design/specification for products improvement without notice.

兴生机械科技
XingSheng Machinery Technology

07 GATE VALVE

Rectangular doors valve Technical Data

Cycle Life	1 million	
Leak rates	1 x 10^{-9} mbar.l/s	
Bakeable Temperature	Body	<90°C
	Driving module	<60°C
Pressure Range	1* 10^{-8} mbar to 1.0 bar	
Driving pressure	5~7 Kg/cm²	
Compressed air connection	Ø 6 mm	
Standard Seal	Gate	Viton O'ring
Position sensor (Standard)	DC4-24(V) or AC4-240(V), 5-40 mA	
Solenoid (Optional)	DC24(V) ,AC24(V),AC110(V),AC220(V)	
Mounting position	Actuator up, down	

Accessories :

M8x45L

PIN Ø10x15L

Dimension in mm unless otherwise noted

All information contained herein was current at time of publication, we reserve the right to change the design/specification for products improvement without notice.

08 ACCESSORIES

ANSI,JIS,DIN Flange 8-2
ANSI ASA Blank 8-6
Welding Bellows Parts 8-8
Electrical Feedthrough 8-9
Sapphire viewport 8-12
Tempered Glass Viewport 8-13
CaF2 Viewport-KF 8-14
Sapphire Viewport 8-15
Magnetic Fluid Feedthrough 8-16
Molecular Sieve 8-23
Inline LN2 Cold Trap 8-24
Exhaust Filter 8-24

ANSI,JIS,DIN Flange

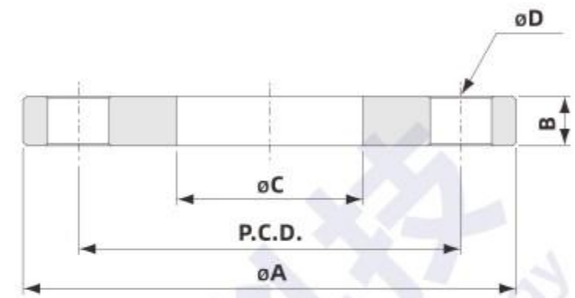

ANSI Flange(150LB)

Model No.	A	B	C	D*No.	Nominal	P.C.D.	Parts No.
ANSI150-350-050	3 1/2	7/16	0.88	5/8*4	1/2	2 3/8	156301A43
ANSI150-388-075	3 7/8	1/2	1.09	5/8*4	3/4	2 3/4	156302A53
ANSI150-426-100	4 1/4	9/16	1.36	5/8*4	1	3 1/8	156303A63
ANSI150-463-125	4 5/8	5/8	1.70	5/8*4	1 1/4	3 1/2	156323A73
ANSI150-500-150	5	11/16	1.95	5/8*4	1 1/2	3 7/8	156305A83
ANSI150-600-200	6	3/4	2.44	3/4*4	2	4 3/4	156306A93
ANSI150-700-250	7	7/8	2.94	3/4*4	2 1/2	5 1/2	156307B13
ANSI150-750-300	7 1/2	15/16	3.57	3/4*8	3	6	156308B23
ANSI150-850-350	8 1/2	15/16	4.07	3/4*8	3 1/2	7	156324B33
ANSI150-900-400	9	15/16	4.57	3/4*8	4	7 1/2	156309B43
ANSI150-1000-500	10	15/16	5.66	7/8*8	5	8 1/2	156310B53
ANSI150-1100-600	11	1	6.72	7/8*8	6	9 1/2	156311B63
ANSI150-1350-800	13 1/2	1 1/8	8.72	7/8*8	8	11 3/4	156313B73

Note:

- All dimensions shown on this page are in inch.
- Material : 304 Stainless Steel.

All information contained herein was current at time of publication, we reserve the right to change the design/specification for products improvement without notice.

JIS Flange(5kg/cm^2)

Model No.	A	B	C	D*No.	Nominal	P.C.D.	Parts No.
JIS5-075-010	75	9	17.8	12*4	10	55	157200AC3
JIS5-080-015	80	9	22.2	12*4	15	60	157201AD3
JIS5-085-020	85	10	27.7	12*4	20	65	157202AE3
JIS5-095-025	95	10	34.5	12*4	25	75	157203AF3
JIS5-115-032	115	12	43.2	15*4	32	90	157223AG3
JIS5-120-040	120	12	49.1	15*4	40	95	157205AH3
JIS5-130-050	130	14	61.1	15*4	50	105	157206AJ3
JIS5-155-065	155	14	77.1	15*4	65	130	157207AK3
JIS5-180-080	180	14	90.0	19*4	80	145	157208AL3
JIS5-190-090	190	14	102.6	19*4	90	155	157224AM3
JIS5-200-100	200	16	115.4	19*8	100	165	157209AN3
JIS5-235-125	235	16	141.2	19*8	125	200	157210AP3
JIS5-265-150	265	18	166.6	19*8	150	230	157211AQ3
JIS5-300-175	300	18	192.1	23*8	175	260	157225AU3
JIS5-320-200	320	20	218.0	23*8	200	280	157213AR3

JIS Flange(10kg/cm^2)

Model No.	A	B	C	D*No.	Nominal	P.C.D.	Parts No.
JIS10-090-010	90	12	17.8	15*4	10	65	157400AC3
JIS10-095-015	95	12	22.2	15*4	15	70	157401AD3
JIS10-100-020	100	14	27.7	15*4	20	75	157402AE3
JIS10-125-025	125	14	34.5	19*4	25	90	157403AF3
JIS10-135-032	135	16	43.2	19*4	32	100	157423AG3
JIS10-140-040	140	16	49.1	19*4	40	105	157405AH3
JIS10-155-050	155	16	61.1	19*4	50	120	157406AJ3
JIS10-175-065	175	18	77.1	19*4	65	140	157407AK3
JIS10-185-080	185	18	90.0	19*8	80	150	157408AL3
JIS10-195-090	195	18	102.6	19*8	90	160	157424AM3
JIS10-210-100	210	18	115.4	19*8	100	175	157409AN3
JIS10-250-125	250	20	141.2	23*8	125	210	157410AP3
JIS10-280-150	280	22	166.6	23*8	150	240	157411AQ3
JIS10-305-175	305	22	192.1	23*12	175	265	157425AU3
JIS10-330-200	330	22	218.0	23*12	200	290	157413AR3

Note: * Material : 304 Stainless Steel.

Dimension in mm unless otherwise noted

All information contained herein was current at time of publication, we reserve the right to change the design/specification for products improvement without notice.

兴生机械科技
XingSheng Machinery Technology

08 ACCESSORIES

DIN Flange(Nominal Pressure 6)

Model No.	A	B	C	D*No.	Nominal	P.C.D.	Parts No.
DIN6-075-010	75	12	17.7	11.5*4	10	50	158200A33
DIN6-080-015	80	12	21.8	11.5*4	15	55	158201A43
DIN6-090-020	90	14	27.4	11.5*4	20	65	158202A53
DIN6-100-025	100	14	34.2	11.5*4	25	75	158203A63
DIN6-120-032	120	16	42.9	14*4	32	90	158203A73
DIN6-130-040	130	16	48.8	14*4	40	100	158205A83
DIN6-140-050	140	16	60.8	14*4	50	110	158206A93
DIN6-160-065	160	16	76.6	14*4	65	130	158207B13
DIN6-190-080	190	18	89.4	18*4	80	150	158208B23
DIN6-210-100	210	18	114.8	18*4	100	170	158209B43
DIN6-240-125	240	20	140.2	18*8	125	200	158210B53
DIN6-265-150	265	20	168.8	18*8	150	225	158211B63
DIN6-320-200	320	22	220.1	18*8	200	280	158213B73

DIN Flange(Nominal Pressure 10)

Model No.	A	B	C	D*No.	Nominal	P.C.D.	Parts No.
DIN10-090-010	90	14	17.7	14*4	10	60	158400A33
DIN10-095-015	95	14	21.8	14*4	15	65	158401A43
DIN10-105-020	105	16	27.4	14*4	20	75	158402A53
DIN10-115-025	115	16	34.2	14*4	25	85	158403A63
DIN10-140-032	140	16	42.9	18*4	32	100	158423A73
DIN10-150-040	150	16	48.8	18*4	40	110	158405A83
DIN10-165-050	165	18	60.8	18*4	50	125	158406A93
DIN10-185-065	185	18	76.6	18*4	65	145	158407B13
DIN10-200-080	200	20	89.4	18*4	80	160	158408B23
DIN10-220-100	220	20	114.8	18*8	100	180	158409B43
DIN10-250-125	250	22	140.2	18*8	125	210	158410B53
DIN10-285-150	285	22	168.8	23*8	150	240	158411B63
DIN10-340-200	340	24	220.1	23*8	200	295	158413B73

Note: * Material : 304 Stainless Steel.

Dimension in mm unless otherwise noted

All information contained herein was current at time of publication, we reserve the right to change the design/specification for products improvement without notice.

ANSI,JIS,DIN Flange

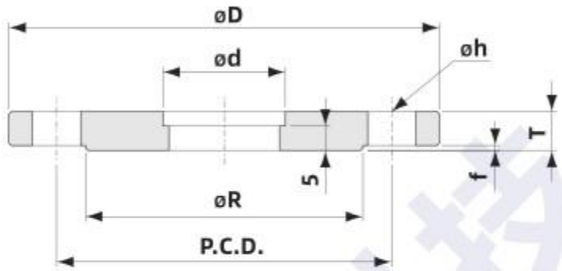

VF Flange(JIS B 2290_1968)

Model No.	ØD	Ød	f	Øh*No.	ØR	T	P.C.D.	Parts No.
VF20A	80	19.3	1	10*4	48	8	60	157502093
VF25A	90	25.6	1	10*4	58	8	70	157503113
VF40A	105	38.3	1	10*4	72	10	85	157505133
VF50A	120	51	1	10*4	88	10	100	157506143
VF80A	160	76.8	2	12*4	120	12	135	157508163
VF100A	185	102.2	2	12*8	145	12	160	157509183
VF150A	235	152.9	2	12*8	195	12	210	157511203
VF200A	300	203.7	2	15*8	252	16	270	157513213

Note: • Material : 304 Stainless Steel.

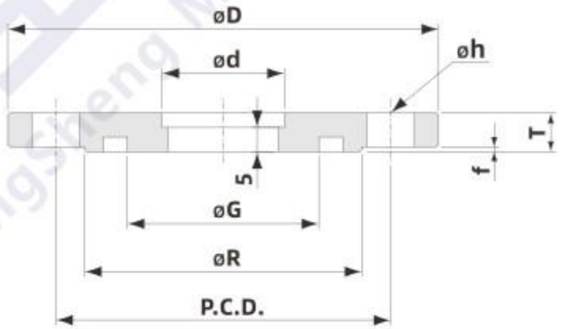

VG Flange(JIS B 2290_1968)

Model No.	ØD	Ød	f	ØG	Øh*No.	ØR	T	P.C.D.	Parts No.
VG20A	80	19.3	1	34	10* 4	48	8	60	157602093
VG25A	90	25.6	1	40	10*4	58	8	70	157603113
VG40A	105	38.3	1	55	10*4	72	10	85	157605133
VG50A	120	51	1	70	10*4	88	10	100	157606143
VG80A	160	76.8	2	100	12*4	120	12	135	157608163
VG100A	185	102.2	2	120	12*8	145	12	160	157609183
VG150A	235	152.9	2	175	12*8	195	12	210	157611203
VG200A	300	203.7	2	225	15*8	252	16	270	157613213

Note: • Material : 304 Stainless Steel.

Dimension in mm unless otherwise noted
All information contained herein was current at time of publication, we reserve the right to change the design/specification for products improvement without notice.

兴生机械科技
XingSheng Machinery Technology

08 ACCESSORIES

ANSI ASA Blank

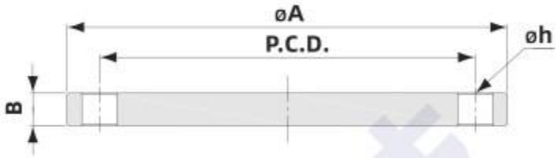

Model No.	ANSI size	A	B	h*No	P.C.D.	Parts No.
ASA4B	1	108(4.25)	12.7	15.8*4	79.4	156A03003
ASA5B	1.5	127(5)	12.7	15.8*4	98.4	156A05003
ASA6B	2	152.4(6)	12.7	19.0*4	120.6	156A06003
ASA7B	3	190.5(7.5)	12.7	19.0*4	152.4	156A08003
ASA9B	4	228.6(9)	12.7	19.0*8	190.5	156A09003
ASA11B	6	279.4(11)	19	20.6*8	241.3	156A11003
ASA13B	8	342.9(13.5)	19	20.6*8	298.5	156A13003
ASA16B	10	406.4(16)	25.4	20.6*12	362	156A14003
ASA19B	12	482.6(19)	27	25.4*12	431.8	156A15003

Note: • Material : 304 Stainless Steel.

ANSI ASA Blank

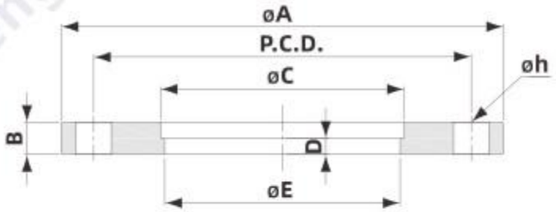

Model No.	ANSI size	A	B	C	D	E	h*No	P.C.D.	Parts No.
ASA4B25	1	108(4.25)	12.7	25.7	6.35	23.4	15.8*4	79.4	156C03113
ASA5B38	1.5	127(5)	12.7	38.4	6.35	36	15.8*4	98.4	156C05133
ASA6B51	2	152.4(6)	12.7	51	6.35	48.6	19.0*4	120.6	156C06143
ASA7B76	3	190.5(7.5)	12.7	76.8	6.35	73	19.0*4	152.4	156C08163
ASA9B102	4	228.6(9)	12.7	102.2	6.35	98.4	19.0*8	190.5	156C09183
ASA11B153	6	279.4(11)	19	152.9	9.5	147.9	20.6*8	241.3	156C11203
ASA13B204	8	342.9(13.5)	19	203.7	9.5	198.9	20.6*8	298.5	156C13213
ASA16B255	10	406.4(16)	25.4	254.5	12.7	249.5	20.6*12	362	156C14223
ASA19B305	12	482.6(19)	27	305.3	13.5	298.5	25.4*12	431.8	156C15233

Note: • Material : 304 Stainless Steel.

Dimension in mm unless otherwise noted
All information contained herein was current at time of publication, we reserve the right to change the design/specification for products improvement without notice.

ANSI ASA Blank with O-ring Groove

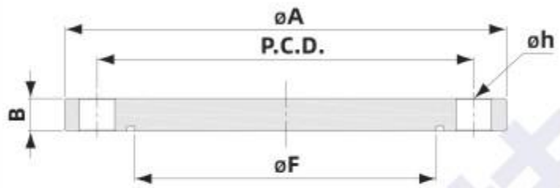

Model No.	ANSI size	A	B	F	h*No	P.C.D.	Parts No.
ASA4GB	1	108(4.25)	12.7	47.5	15.8*4	79.4	156E03003
ASA5GB	1.5	127(5)	12.7	63.5	15.8*4	98.4	156E05003
ASA6GB	2	152.4(6)	12.7	88.9	19.0*4	120.6	156E06003
ASA7GB	3	190.5(7.5)	12.7	117.6	19.0*4	152.4	156E08003
ASA9GB	4	228.6(9)	12.7	152.8	19.0*8	190.5	156E09003
ASA11GB	6	279.4(11)	19	203.8	20.6*8	241.3	156E11003
ASA13GB	8	342.9(13.5)	19	254.8	20.6*8	298.5	156E13003
ASA16GB	10	406.4(16)	25.4	306	20.6*12	362	156E14003
ASA19GB	12	482.6(19)	27	382.5	25.4*12	431.8	156E15003

Note: • Material : 304 Stainless Steel.

ANSI ASA Flange with O-ring Groove

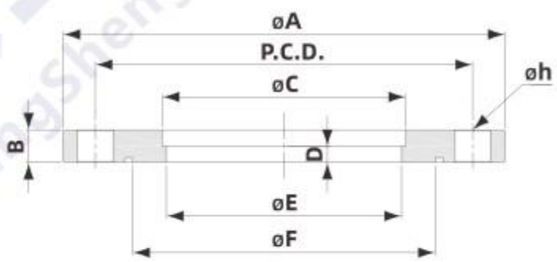

Model No.	ANSI size	A	B	C	D	E	F	h*No	P.C.D.	Parts No.
ASA4GB25	1	108(4.25)	12.7	25.7	6.35	23.4	47.5	15.8*4	79.4	156G03113
ASA5GB38	1.5	127(5)	12.7	38.4	6.35	36	63.5	15.8*4	98.4	156G05133
ASA6GB51	2	152.4(6)	12.7	51	6.35	48.6	88.9	19.0*4	120.6	156G06143
ASA7GB76	3	190.5(7.5)	12.7	76.8	6.35	73	117.6	19.0*4	152.4	156G08163
ASA9GB102	4	228.6(9)	12.7	102.2	6.35	98.4	152.8	19.0*8	190.5	156G09183
ASA11GB153	6	279.4(11)	19	152.9	9.5	147.9	203.8	20.6*8	241.3	156G11203
ASA13GB204	8	342.9(13.5)	19	203.7	9.5	198.9	254.8	20.6*8	298.5	156G13213
ASA16GB255	10	406.4(16)	25.4	254.5	12.7	249.5	306	20.6*12	362	156G14223
ASA19GB305	12	482.6(19)	27	305.3	13.5	298.5	382.5	25.4*12	431.8	156G15233

Dimension in mm unless otherwise noted

All information contained herein was current at time of publication, we reserve the right to change the design/specification for products improvement without notice.

兴生机械科技
XingSheng Machinery Technology

08 ACCESSORIES

Welding Bellows Parts

Application

- Semiconductor Equipments
- Accumulators
- Actuators / Pistons
- Aneroids
- Bean Lines
- Connectors
- Couplings (Flexible)
- Couplings
- Expansion (Torque)
- Dampening Devices Joints
- Feed Throughs
- Fluid Shock Absorbers
- Fuel Drains
- Gas Lines
- Gate Valves
- Kiss Seals
- Leak Detectors
- Lifters
- Mechanical Shaft Seals
- Orientors
- Pressure Sensors
- Pressure Switches
- Pressure Transducers
- Pumps / Compressors
- Reservoirs
- Shielding Devices
- Slit Valves
- Temperature Sensors
- Valve Stem Seals
- Vibration Dampeners
- Volume Compensators
- Wafer Compensators
- X-Y-Z Manipulators

Dimension in mm unless otherwise noted

All information contained herein was current at time of publication, we reserve the right to change the design/specification for products improvement without notice.

Electrical Feedthrough

1. High Machining Accuracy
2. Temperature Range ： -100°C to 450°C
3. The Maximun Transferable Voltage is Up to 100kV
4. Customization Available Upon Request

Dimension in mm unless otherwise noted
All information contained herein was current at time of publication, we reserve the right to change the design/specification for products improvement without notice.

兴生机械科技
XingSheng Machinery Technology

08 ACCESSORIES

KF Electrical Feedthrough

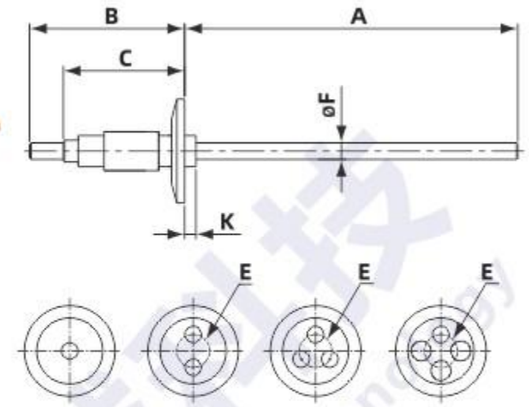

Figure 1 Figure 2 Figure 3 Figure 4

End view

Model No.	Flange	No. Pins	Conductor Material	Voltage (kV)	Current (A)	Figure	Part No.
PFA01171QF	KF16	1	OFHC	5	180	1	1000FF030025
PFA01173QF	KF16	1	304 S.S.	5	7	1	1000FF030026
PFA01181QF	KF40	1	OFHC	5	180	1	1000FF030027
PFA01183QF	KF40	1	304 S.S.	5	7	1	1000FF030028
PFA01141QF	KF40	2	OFHC	5	180	2	1000FF030029
PFA01143QF	KF40	2	304 S.S.	5	7	2	1000FF030030
PFA01151QF	KF40	3	OFHC	5	180	3	1000FF030031
PFA01153QF	KF40	3	304 S.S.	5	7	3	1000FF030032
PFA01161QF	KF50	4	OFHC	5	180	4	1000FF030004
PFA01163QF	KF50	4	304 S.S.	5	7	4	1000FF030033

Model No.	A	B	C	K	E	F	Part No.
PFA01171QF	118	66	40.6	5.8	---	6.35	1000FF030025
PFA01173QF	118	66	40.6	5.8	---	6.35	1000FF030026
PFA01181QF	104.6	79.5	54	---	---	6.35	1000FF030027
PFA01183QF	104.6	79.5	54	---	---	6.35	1000FF030028
PFA01141QF	104.6	79.5	54	---	19.05	6.35	1000FF030029
PFA01143QF	104.6	79.5	54	---	19.05	6.35	1000FF030030
PFA01151QF	104.6	79.5	54	---	24	6.35	1000FF030031
PFA01153QF	104.6	79.5	54	---	24	6.35	1000FF030032
PFA01161QF	104.6	79.5	54	---	24	6.35	1000FF030004
PFA01163QF	104.6	79.5	54	---	24	6.35	1000FF030033

Note: All listed flanges are 304 S.S., other material could be used on request.

Dimension in mm unless otherwise noted
All information contained herein was current at time of publication, we reserve the right to change the design/specification for products improvement without notice.

CF Electrical Feedthrough

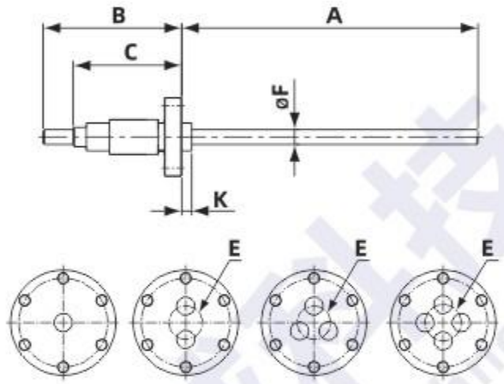

End view

Model No.	Flange	No. Pins	Conductor Material	Voltage (kV)	Current (A)	Figure	Part No.
PFA00491CF	CF16	1	OFHC	5	180	1	1000FF030034
PFA00493CF	CF16	1	304 S.S.	5	7	1	1000FF030035
PFA01131CF	CF35	1	OFHC	5	180	1	1000FF030005
PFA01133CF	CF35	1	304 S.S.	5	7	1	1000FF030036
PFA00651CF	CF35	2	OFHC	5	180	2	1000FF030014
PFA00653CF	CF35	2	304 S.S.	5	7	2	1000FF030037
PFA00641CF	CF35	3	OFHC	5	180	3	1000FF030038
PFA00643CF	CF35	3	304 S.S.	5	7	3	1000FF030039
PFA00631CF	CF35	4	OFHC	5	180	4	1000FF030040
PFA00633CF	CF35	4	304 S.S.	5	7	4	1000FF030041

Model No.	A	B	C	K	E	F	Part No.
PFA00491CF	116.3	67.8	42.4	3.6	---	6.35	1000FF030034
PFA00493CF	116.3	67.8	42.4	3.6	---	6.35	1000FF030035
PFA01131CF	103.4	80.8	55.4	---	---	6.35	1000FF030005
PFA01133CF	103.4	80.8	55.4	---	---	6.35	1000FF030036
PFA00651CF	103.4	80.8	55.4	---	19.05	6.35	1000FF030014
PFA00653CF	103.4	80.8	55.4	---	19.05	6.35	1000FF030037
PFA00641CF	103.4	80.8	55.4	---	24	6.35	1000FF030038
PFA00643CF	103.4	80.8	55.4	---	24	6.35	1000FF030039
PFA00631CF	103.4	80.8	55.4	---	24	6.35	1000FF030040
PFA00633CF	103.4	80.8	55.4	---	24	6.35	1000FF030041

Note: All listed flanges are 304 S.S, other material could be used on request.

Dimension in mm unless otherwise noted
All information contained herein was current at time of publication, we reserve the right to change the design/specification for products improvement without notice.

兴生机械科技
XingSheng Machinery Technology

08 ACCESSORIES

Sapphire viewport

A sapphire viewport consists of a stainless steel flange, a bridge adaptor and a sapphire dielectric. Kovar is typically used as the material of bridge adaptor to form hermetic seals between SUS flange and sapphire dielectric. Besides, a prior surface metallization layer has to be applied on sapphire dielectric before it can be hermetically sealed with kovar adaptor by brazing. The metallization layer mainly contains Mo, Mn and Ni. Since both kovar and Ni are magnetic materials, they will distort spatial distribution of ambient magnetic field. This has to be taken into account if foregoing effect is critical to user's application with viewport.

Our sapphire viewport contains non-magnetic stainless steel, either 304 or 316, and sapphire dielectric only. Surface metallization layer on sapphire disk doesn't contain any magnetic composition. Proprietary technology of unmatched seal is used in brazing sapphire disk with stainless steel adaptor together, which in turn is tig-welded with stainless steel flange. Our offer of non-magnetic sapphire viewport is the solution if referred distortion of magnetic field by the existence of magnetic material can't be tolerated in user's application.

Dimension in mm unless otherwise noted
All information contained herein was current at time of publication, we reserve the right to change the design/specification for products improvement without notice.

KF Flange Sapphire Viewport

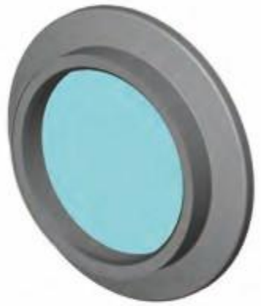

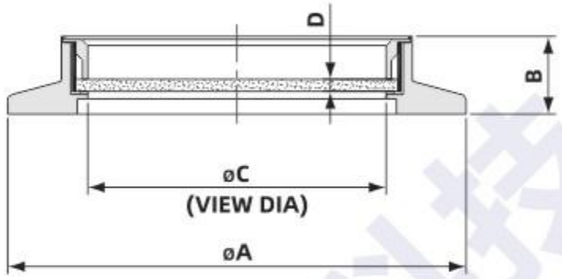

Model No.	Material	A	B	C	D	Flange	Parts No .
KVPS39	304 S.S. / Sapphire	55	12.7	38.5	2	KF40	1000V0A043
KVPS49	304 S.S. / Sapphire	75	12.7	48.8	2	KF50	1000V0A037

- Non-magnetic
- Excellent Surface Finish : 20-10 Scratch-Dig
- Broader Temperature & Transmission Range
- High Trensparency & Wide Bandwidth
- High Hardness
- Customization Available Upon Request

Description	Description
Window Material	Sapphire
Flange Material	304 S.S. or 316 S.S.
Adapter	304 S.S. or 316 S.S.
Leak Rate	<1x10^{-10} mbar.l/sec
Temperature Range	-100°C to 450°C
Transmission rate/rang	>80% (0.2 μm~4.8μm)
Max Thermal Gradient	15°C/min

Transmission Curve

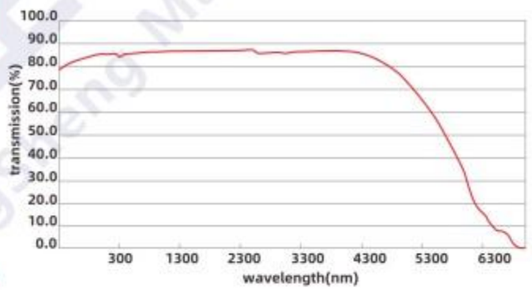

Dimension in mm unless otherwise noted
All information contained herein was current at time of publication, we reserve the right to change the design/specification for products improvement without notice.

兴生机械科技
XingSheng Machinery Technology

08 ACCESSORIES

KF Flange CaF2 Viewport

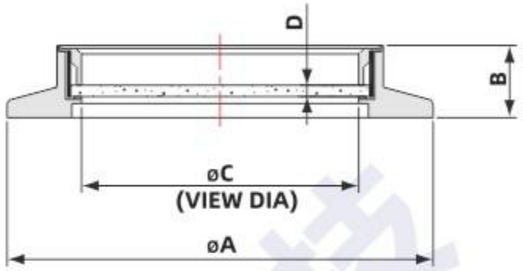

Model No.	A	B	C	D	Flange	Material	Parts No.
KVPC24	40	12.7	23.8	1.6	KF25	304S.S./CaF2	1000V0D001
KVPC39	55	12.7	38.5	2.7	KF40	304S.S./CaF2	1000V0D002

Description :

- Material of flange : 304S.S. or 316S.S. on customer demand
- Material of adaptor : 304S.S.
- Applicable vacuum range : 1X 10^{-10} mbar
- (Practical vacuum range : contingent on customer 's O-ring)
- Applicable temperature range : -100°C to 200°C

Transmission Curve

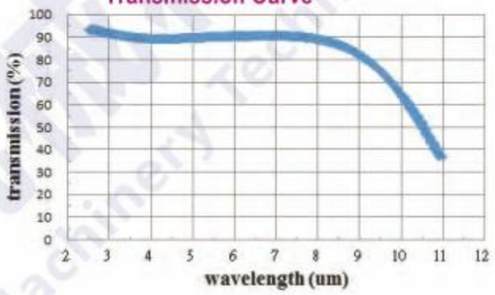

CF Flange CaF2 Viewport

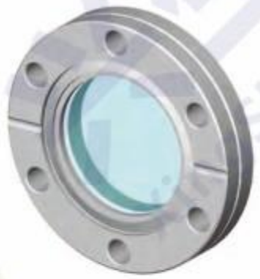

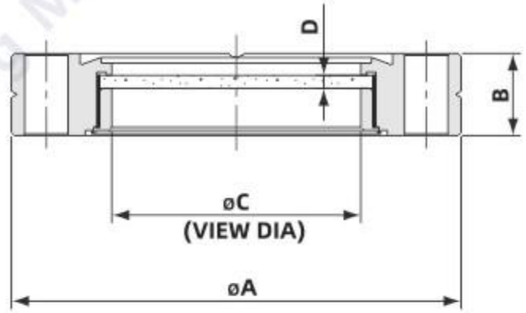

Model No.	A	B	C	D	Flange	Material	Parts No.
CVPC39	69.5	12.7	38.5	2.7	CF35	304S.S./CaF2	1000V0D003

Description :

- Material of flange : 304S.S. or 316S.S. on customer demand
- Material of adaptor : 304S.S.
- Applicable vacuum range : 1X 10^{-10} mbar
- (Practical vacuum range : contingent on customer 's O-ring)
- Applicable temperature range : -100°C to 200°C

Transmission Curve

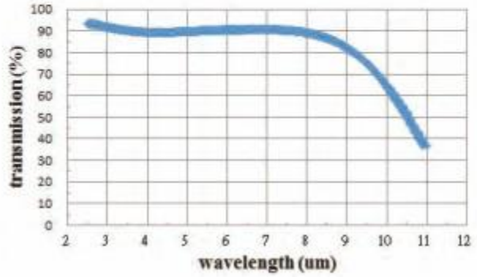

Dimension in mm unless otherwise noted
All information contained herein was current at time of publication, we reserve the right to change the design/specification for products improvement without notice.

KF Flange Tempered Glass Viewport

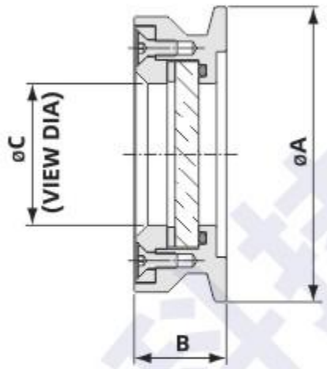

Model No.	A	B	C	Fits Flange	Parts No.
KF50VP	75	25	36	KF50	151A0600C

- Window Material : Tempered glass
- Body Material : 304S.S.
- Flange : KF
- Type of sealing : O-ring(Viton)
- Pressure Range : 1.2 bar~$1x10^{-8}$ mbar
- Leak Rate : $1x10^{-9}$ mbar.l / sec
- Temperature Range : -5°C~150°C

ISO Flange Tempered Glass Viewport

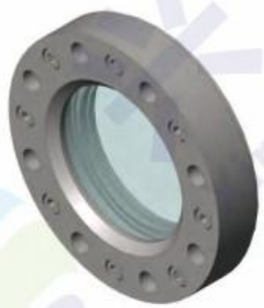

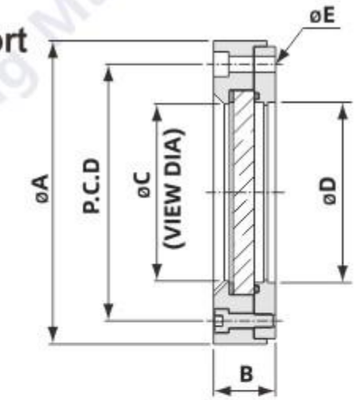

Model No.	A	B	C	D	E*No.	P.C.D.	Parts No.
ISO63VP	136.5	35	63	70	9*4	110	152A0700C
ISO100VP	171.4	35	98	102	9*8	145	152A0900C

- Window Material : Tempered glass
- Body Material : 304S.S.
- Flange : ISO
- Type of sealing : O-ring(Viton)
- Pressure Range : 1.2 bar~$1x10^{-8}$ mbar
- Leak Rate : $1x10^{-9}$ mbar.l / sec
- Temperature Range : -5°C~150°C

Dimension in mm unless otherwise noted
All information contained herein was current at time of publication, we reserve the right to change the design/specification for products improvement without notice.

兴生机械科技
XingSheng Machinery Technology

08 ACCESSORIES

Magnetic Fluid Feedthrough

Application

Htc vacuum provides quality magnetic fluid rotary feedthroughs, which introduces rotary motion into vacuum environments. A magnetic fluid rotary feedthrough is composed of a non-magnetic housing, bearings, pole pieces, a permanent magnet, a magnetic shaft and ferrofluid. When ferrofluid is applied to the gap between the shaft and the pole pieces in a rotary feedthrough, it creates a magnetic field which functions like an O-ring in the gap. Magnetic fluid rotary feedthroughs can be used in ultra-high vacuum systems and other critical equipment in Semiconductor, FPD, and Solar PV Industry.

Features

- **Long Service Life**
  Non-contact seal, no mechanical friction, very low maintenance
- **High Vacuum Capability**
  Low vapor pressure, used in vacuum range up to 10^{-8} mbar
- **High Speed Capability**
  Very low particle occurs, capable of high speed
- **Wide Transfer Torque**
  Various models are available according to application : from 5kg·cm up to over 5000kg·cm
- **Optimum Torque Transmission**
  Very little torque lost, no backlash or stick-slip

Application

- Vacuum range : up to 10^{-8} mbar
- Leak rate(He) : < 10^{-11} mbar.l/sec (He)
- Temperature : 0~80°C

Notice

- Prevent magnetic fluid rotary feedthrough from dust and organic solvents (alcohol, acetone, Freon, etc.)
- Do not load higher than 1kg/cm² in vacuum environment.
- When the shaft of magnetic fluid rotary feedthrough is at rest, it is normal that the vacuum pressure may rise after the shaft starts working. The situation can be avoided through advanced startup.
- For water cooling devices, the cooling water should be at 1-3kg/cm² at room temperature. Besides, water can not be left in the inner feedthrough which could cause rust and circumrotating failure.

Dimension in mm unless otherwise noted
All information contained herein was current at time of publication, we reserve the right to change the design/specification for products improvement without notice.

Flange Mount, Solid Shaft

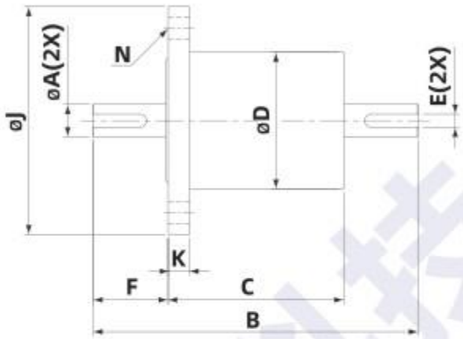

Model No.	A	B	C	D	E	F	J	K	N	Torque (kg-cm)	Parts No.
SF006	Ø6 $^{+0}_{-0.018}$	97.5	57.5	38	0.5Dp*12Lg(Flat)	20	78	10	P.C.D.60/4-Ø10	9.2	1000FF011001
SF010	Ø10	119.5	69.5	44	3W*1.8Dp*14Lg	25	78	10	P.C.D.60/4-Ø10	59	1000FF011002
SF012	Ø12 $^{+0}_{-0.02}$	133.5	73.5	48	4W*2.5Dp*20Lg	30	88	10	P.C.D.70/4-Ø10	118	1000FF011003
SF020	Ø20 $^{+0}_{-0.033}$	151.5	81.5	63	6W*3.5Dp*25Lg	35	105	10	P.C.D.85/4-Ø10	585	1000FF011004
SF026	Ø25 $^{+0}_{-0.033}$	173.5	93.5	75	8W*4Dp*30Lg	40	115	10	P.C.D.95/6-Ø10	1013	1000FF011005

- Degree vacuum pressure [mbar] : $1*10^{-8}$
- Leakage rate(He) [mbar.l/sec] : $<10^{-11}$
- Temperature range(°C) : 0~80°C (Adding water cooling structure if it is beyond this temperature range)

Nose Mount, Solid Shaft

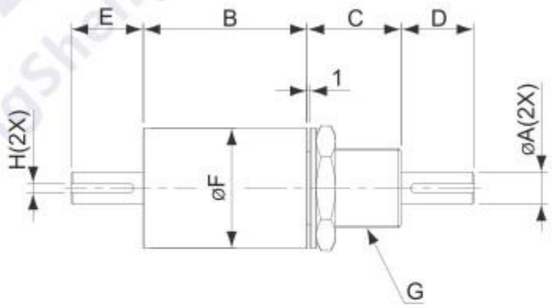

Model No.	A	B	C	D	E	F	G	H	Torque (kg-cm)	Parts No.
ST005	Ø5 $^{-0.010}_{-0.022}$	32	6	12.5	15	16	M8xP1	-	9.2	1000FF012001
ST006	Ø6 $^{-0}_{-0.018}$	42	10	15	15	28	M12xP1.25	0.5Dp*10Lg(Flat)	15.2	1000FF012002
ST010	Ø10 $^{-0.013}_{-0.028}$	52	30	23	23	38	M25xP1.5	3W*1.8Dp*20Lg	76	1000FF012003
ST020	Ø20 $^{-0.020}_{-0.041}$	60	34	36	36	54	M40xP1.5	6W*3.5Dp*32Lg	570	1000FF012004

- Degree vacuum pressure [mbar] : $1*10^{-8}$
- Leakage rate(He) [mbar.l/sec] : $<10^{-11}$
- Temperature range(°C) : 0~80°C (Adding water cooling structure if it is beyond this temperature range)

Dimension in mm unless otherwise noted

All information contained herein was current at time of publication, we reserve the right to change the design/specification for products improvement without notice.

兴生机械科技
XingSheng Machinery Technology

08 ACCESSORIES

Single Axle(shaft) Non Flange Ferrofluid Feedthrough

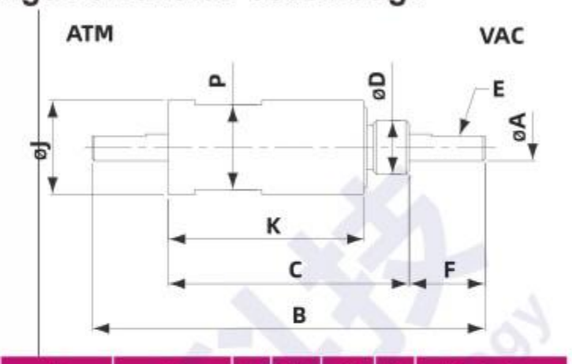

Model No.	ØA	B	C	D	E	F	ØJ	K	P	Parts No.
ASS0004CNR10	Ø4 $^{+0}_{-0.018}$	76.5	46.5	M12*P1.5	0.5Dp*10Lg	15	21	36.5	19	1000FF050001
ASS0005CNR10	Ø5 $^{+0}_{-0.018}$	76.5	46.5	M12*P1.5	0.5Dp*10Lg	15	21	36.5	19	1000FF050002
ASS0006CNR10	Ø6 $^{+0}_{-0.018}$	76.5	46.5	M12*P1.5	0.5Dp*10Lg	15	21	36.5	19	1000FF050003

- Degree vacuum pressure [mbar] : $1*10^{-6}$
- Leakage rate(He) [mbar.l/sec] : $<10^{-12}$
- Temperature range(°C) : 0~80°C
- Applicable Gas : Inert Gas
- Housing Material : 304S.S.
- Shaft Material : 420S.S.

Nut Bush Ferrofluid Vacuum Seal Axle Feedthrough

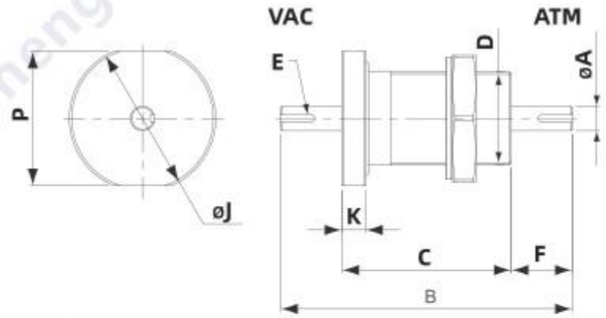

Model No.	ØA	B	C	D	E	F	ØJ	K	P	Parts No.
ABS0006CNR10	Ø6 $^{+0}_{-0.018}$	97.5	57.5	M32*P1.5	0.5Dp*12Lg(Flat)	20	55	10	-	1000FF051001
ABS0010CNR10	Ø10 $^{+0}_{-0.018}$	119.5	69.5	M38*P1.5	3W*1.8Dp*14Lg	25	60	10	55	1000FF051002
ABS0012CNR10	Ø12 $^{+0}_{-0.018}$	119.5	69.5	M38*P1.5	3W*1.8Dp*14Lg	25	60	10	55	1000FF051003

- Degree vacuum pressure [mbar] : $1*10^{-6}$
- Leakage rate(He) [mbar.l/sec] : $<10^{-12}$
- Temperature range(°C) : 0~80°C
- Applicable Gas : Inert Gas
- Housing Material : 304S.S.
- Shaft Material : 420S.S.

Dimension in mm unless otherwise noted

All information contained herein was current at time of publication, we reserve the right to change the design/specification for products improvement without notice.

Semiconductor Sealed Spindles

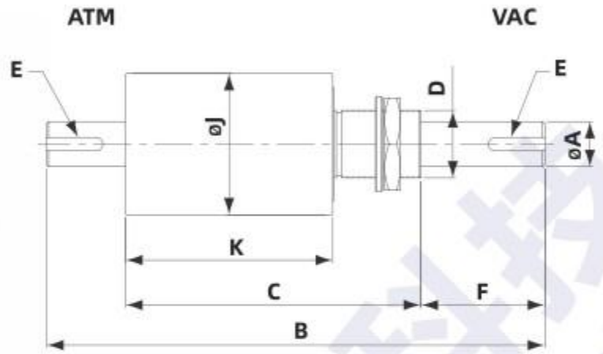

Model No.	ØA	B	C	D	E	F	ØJ	K	Parts No.
ANS0012CNR10	Ø12 $^{+0}_{-0.027}$	179	109	M25*P1.5	4W*2.5Dp*20Lg	40	48	74	1000FF052001
ANS0020CNR10	Ø20 $^{+0}_{-0.033}$	211	121	M30*P1.5	6W*3.5Dp*25Lg	55	63	82	1000FF052002

- Degree vacuum pressure [mbar] : $1*10^{-6}$
- Leakage rate(He) [mbar.l/sec] : $<10^{-12}$
- Temperature range(°C) : 0~80°C
- Applicable Gas : Inert Gas
- Housing Material : 304S.S.
- Shaft Material : 420S.S.

Semiconductor Sealed Spindles

With Water Cooling

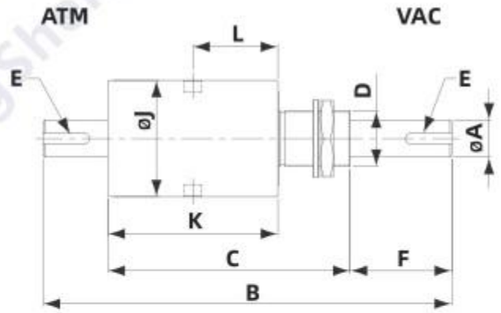

Model No.	ØA	B	C	D	E	F	ØJ	K	L	Parts No.
ANS0012WNR10	Ø12 $^{+0}_{-0.027}$	179	109	M25*P1.5	4W*2.5Dp*20Lg	40	48	74	36.5	1000FF053001
ANS0020WNR10	Ø20 $^{+0}_{-0.033}$	211	121	M30*P1.5	6W*3.5Dp*25Lg	55	63	82	40.5	1000FF053002

- Degree vacuum pressure [mbar] : $1*10^{-6}$
- Leakage rate(He) [mbar.l/sec] : $<10^{-12}$
- Temperature range(°C) : 0~80°C
- Applicable Gas : Inert Gas
- Housing Material : 304S.S.
- Shaft Material : 420S.S.

Dimension in mm unless otherwise noted

All information contained herein was current at time of publication, we reserve the right to change the design/specification for products improvement without notice.

兴生机械科技
XingSheng Machinery Technology

08 ACCESSORIES

Hollow Axle Magnetic Fluid Feedthrough

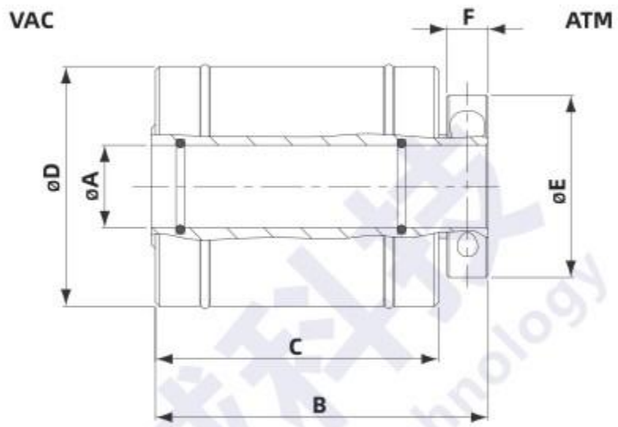

Model No.	ØA	B	C	ØD	ØE	F	Parts No.
ACM0010CNR10	Ø10 $^{+0.03}_{+0.01}$	78	64	48$^{+0}_{-0.02}$	34	10	1000FF054001
ACM0020CNR10	Ø20 $^{+0.04}_{+0.02}$	82.5	68.5	58$^{+0}_{-0.03}$	44	10	1000FF054002
ACM0025CNR10	Ø25 $^{+0.04}_{+0.02}$	88	74	63$^{+0}_{-0.03}$	49	10	1000FF054003
ACM0030CNR10	Ø30 $^{+0.04}_{+0.02}$	93	79	73$^{+0}_{-0.03}$	54	10	1000FF054004
ACM0040CNR10	Ø40 $^{+0.05}_{+0.02}$	96	80	88$^{+0}_{-0.04}$	69	12	1000FF054005
ACM0050CNR10	Ø50 $^{+0.05}_{+0.02}$	98	82	98$^{+0}_{-0.04}$	79	12	1000FF054006
ACM0075CNR10	Ø75 $^{+0.06}_{+0.03}$	115	96	137$^{+0}_{-0.04}$	109	15	1000FF054007

- Degree vacuum pressure [mbar] : $1*10^{-6}$
- Leakage rate(He) [mbar.l/sec] : $<10^{-12}$
- Temperature range(°C) : 0~80°C
- Applicable Gas : Inert Gas
- Housing Material : 304S.S.
- Shaft Material : 420S.S.

Dimension in mm unless otherwise noted

All information contained herein was current at time of publication, we reserve the right to change the design/specification for products improvement without notice.

Hollow Axle Flanged Ferrofluid Feedthrough

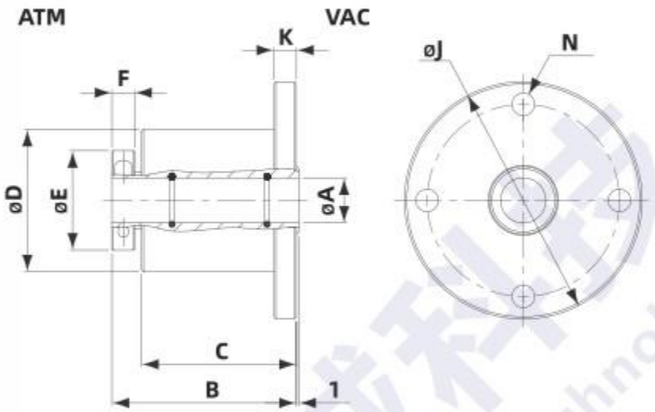

Model No.	ØA	B	C	ØD	ØE	F	ØJ	N	Parts No.
AFM0010CNR10	Ø10 $^{+0.03}_{+0.01}$	78	64	51	34	10	90	P.C.D.70/4-Ø10	1000FF055001
AFM0020CNR10	Ø20 $^{+0.04}_{+0.02}$	82.5	68.5	63	44	10	105	P.C.D.85/4-Ø10	1000FF055002
AFM0025CNR10	Ø25 $^{+0.04}_{+0.02}$	88	74	71	49	10	120	P.C.D.100/4-Ø10	1000FF055003
AFM0030CNR10	Ø30 $^{+0.04}_{+0.02}$	93	79	78	54	10	120	P.C.D.100/4-Ø10	1000FF055004
AFM0040CNR10	Ø40 $^{+0.05}_{+0.02}$	96	80	90	69	12	145	P.C.D.120/4-Ø12	1000FF055005
AFM0050CNR10	Ø50 $^{+0.05}_{+0.02}$	98	82	103	79	12	160	P.C.D.135/4-Ø12	1000FF055006
AFM0075CNR10	Ø75 $^{+0.06}_{+0.03}$	115	96	143	109	15	210	P.C.D.185/8-Ø12	1000FF055007

- Degree vacuum pressure [mbar] : $1*10^{-6}$
- Leakage rate(He) [mbar.l/sec] : $<10^{-12}$
- Temperature range(°C) : 0~80°C
- Applicable Gas : Inert Gas
- Housing Material : 304S.S.
- Shaft Material : 420S.S.

Dimension in mm unless otherwise noted

All information contained herein was current at time of publication, we reserve the right to change the design/specification for products improvement without notice.

兴生机械科技
XingSheng Machinery Technology

08 ACCESSORIES

Hollow Axle Flanged Ferrofluid Feedthrough

With Water Cooling

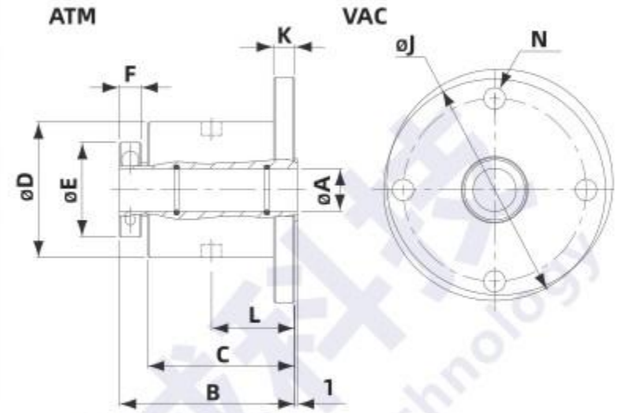

Model No.	ØA	B	C	ØD	ØE	F	ØJ	N	Parts No.
AFM0010WNR10	Ø10 $^{+0.03}_{+0.01}$	78	64	51	34	10	90	P.C.D.70/4-Ø10	1000FF056001
AFM0020WNR10	Ø20 $^{+0.04}_{+0.02}$	82.5	68.5	63	44	10	105	P.C.D.85/4-Ø10	1000FF056002
AFM0025WNR10	Ø25 $^{+0.04}_{+0.02}$	88	74	71	49	10	120	P.C.D.100/4-Ø10	1000FF056003
AFM0030WNR10	Ø30 $^{+0.04}_{+0.02}$	93	79	78	54	10	120	P.C.D.100/4-Ø10	1000FF056004
AFM0040WNR10	Ø40 $^{+0.05}_{+0.02}$	96	80	90	69	12	145	P.C.D.120/4-Ø12	1000FF056005
AFM0050WNR10	Ø50 $^{+0.05}_{+0.02}$	98	82	103	79	12	160	P.C.D.135/4-Ø12	1000FF056006
AFM0075WNR10	Ø75 $^{+0.06}_{+0.03}$	115	96	143	109	15	210	P.C.D.185/8-Ø12	1000FF056007

- Degree vacuum pressure [mbar] : $1*10^{-6}$
- Leakage rate(He) [mbar.l/sec] : $<10^{-12}$
- Temperature range(°C) : 0~80°C
- Applicable Gas : Inert Gas
- Housing Material : 304S.S.
- Shaft Material : 420S.S.

Dimension in mm unless otherwise noted

All information contained herein was current at time of publication, we reserve the right to change the design/specification for products improvement without notice.

Molecular Sieve

The zeolite inside the tank trap the oil vapor that back stream toward the vacuum chamber from mechanical pump,and trap other gases include water vapor from chamber toward the mechanical pump.

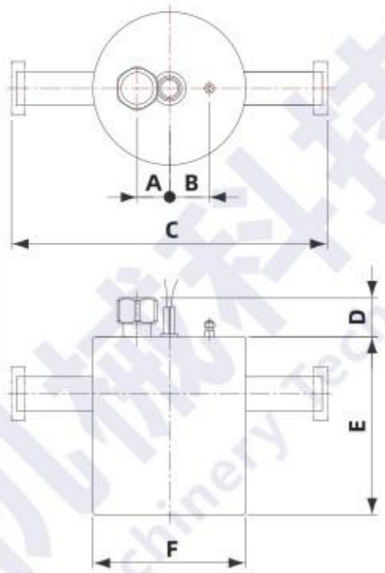

Model No.	O.D.	A	B	C	D	E	F	Parts No.
MST-KF16	19.1	24	30	236.2	28.7	133.4	Ø114.3	1000H0B010
MST-KF25	25.4	24	30	236.2	28.7	133.4	Ø114.3	1000H0B003
MST-KF40	38.1	24	30	236.2	28.7	200	Ø114.3	1000H0B004
MST-CF35	38.1	24	30	239.2	28.7	200	Ø114.3	1000H0B012

- Trap body : 304S.S.
- Power : AC110 , 300V
- Sieve material : zeolite
- Zeolite type : 13x4mm (pellet size)
- Zeolite capacity : KF16/KF25(0.5kg)
  KF40/CF35(0.7kg)

Dimension in mm unless otherwise noted

All information contained herein was current at time of publication, we reserve the right to change the design/specification for products improvement without notice.

兴生机械科技
XingSheng Machinery Technology

08 ACCESSORIES

Inline LN_2 Cold Trap

A cold trap is equipped at pumping line between chamber and pump. The cold trap can trap the volatile material to prevent they enter the mechanical pump and trap the oil from mechanical pump to prevent they enter the chamber.

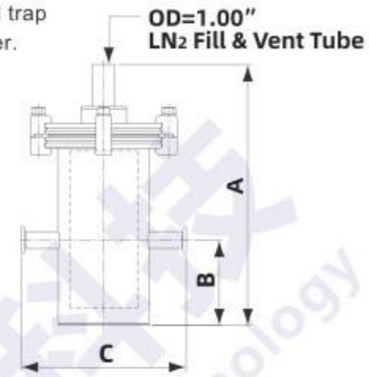

Model No.	Flange size	LN2 Volume (liters)	A	B	C	Parts No.
KF16LN2CT	KF16	0.7	290	95	185	1000H0P001
KF25LN2CT	KF25	0.7	290	95	185	1000H0P002
KF40LN2CTS	KF40	0.7	290	95	185	1000H0P003
KF40LN2CT	KF40	1.6	360	115	235	1000H0P004
KF50LN2CT	KF50	1.6	360	115	235	1000H0P005

Refill time table for single tube LN_2 traps

Trap diameter (Inch)	LN2 Volume (liters)	Hours
4	0.7	8
6	1.6	12

Exhaust Filter

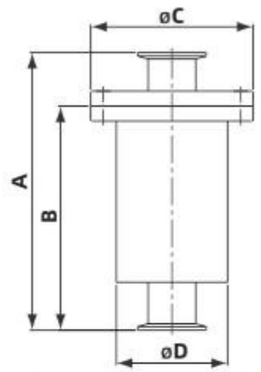

Model No.	A	B	C	D	Connector	Filter Material	Filter Pore Size	Parts No.
EFT-KF25-PP	222.5	179.5	130	89	KF25	PP	0.3	ZZE039A0030100
EFT-KF40-PP	222.5	179.5	130	89	KF40	PP	0.3	ZZE039A0020100
EFT-KF25NWF	222.5	179.5	130	89	KF25	non-woven fabric	25	ZZE115A0010100
EFT-KF40NWF	222.5	179.5	130	89	KF40	non-woven fabric	25	ZZE004A0050100
EFT-KF40-SS	222.5	179.5	174	133	KF40	stainless shavings	N/A	ZZE135A0010100

- Body material : 304S.S.

Dimension in mm unless otherwise noted

All information contained herein was current at time of publication, we reserve the right to change the design/specification for products improvement without notice.

09 VACUUM CHAMBER & SYSTEM

Vacuum Chamber 9-2
UHV Vacuum Chamber 9-4
Vacuum Module System 9-6

Vacuum Chambers

Htc vacuum provided to customized vacuum chamber device by you need. Standard vacuum chamber or vacuum device comes with the accompanying cost benefits and fast delivery. The Ultra high vacuum(UHV) system (base pressure 10^{-10} torr) for surface analysis science to the university laboratory, and we also designed a special cooling system for the process chambers device of thin film equipment which the temperature of substrate comes near to 600°C

Vacuum environment is an essential ingredient in thin film coating process and surface analysis science. A high quality customized vacuum chamber device is very important to the performance of equipment. Htc Vacuum has the extensive experience of designing and manufacturing various customized high vacuum(HV) and Ultra high vacuum(UHV) vacuum chamber devices.

The most commonly used material for vacuum chambers is stainless steel, aluminum, or carbon steel. The shape of customized vacuum chambers can be rectangle, cylinder, box, D-shape, spherical, Polygon, Bell jar and multi-edge.

Htc vacuum can provide several kinds of surface treatment of the vacuum chambers, such as sandblast, polished, and electro polished. We also provide the vacuum chamber stress relief process via heat treatment or vibration method. Furthermore, modules or systems can be assembled and tested in Htcvacuum's working shop to reduce the lead time and logistic cost.

The advantages of Htc for vacuum chambers :

1. Htc vacuum has the custom chamber extensive experience in high vacuum(HV) and Ultra high vacuum(UHV) industry.
2. Stock vacuum components, such as vacuum flanges, fittings and valves, are ready for vacuum chamber designing and manufacturing
3. Excellent machining ability and enough space for vacuum chamber manufacturing. Plate cutting, machining, welding, cleaning, assembly, and leak test all can be done in house.
4. Pumping system is all set for chamber pumping and leak testing, and Htc's own pump service teams can offer any assist in case.

Htc vacuum provides various high vacuum(HV) and Ultra high vacuum(UHV) chambers to Europe, North America, and Japan, and established an excellent reputation for high quality. Htc vacuum will continue the improvement and development of vacuum chambers to satisfy our customers and their needs.

All information contained herein was current at time of publication, we reserve the right to change the design/specification for products improvement without notice.

Vacuum Chambers

Cylindrical vacuum chamber

Application for Optical Technology Reaserch (Ø 1.8m x L 5.23m)

Box vacuum chamber

D Shape vacuum chamber

Spherical vacuum chamber

Polygon vacuum chamber

Bell jar vacuum chamber

Largest vacuum chamber

Aluminum vacuum chamber

Dimension in mm unless otherwise noted
All information contained herein was current at time of publication, we reserve the right to change the design/specification for products improvement without notice.

兴生机械科技
XingSheng Machinery Technology

09 VACUUM CHAMER&SYSTEM

UHV Chambers

Ultra-high vacuum (UHV) is the art of precise vacuum technology, all kinds of vacuum coating, testing, analysis, measurement, and other experiments are integrated in one or more UHV vacuum chambers per customer's demand. And we can use ultra-high vacuum transmission system and degassing vacuum chamber in UHV vacuum pump to make linkage. Htc vacuum has the rich experience and vacuum technology in UHV chamber and UHV component fabrication.

Htc vacuum make the precise design of UHV vacuum chamber according to different experimental demand and guarantee to meet customer's experiment on a variety of quality and performance requirements.

Htc vacuum is an expert in manufacture ultra-high vacuum (UHV) chamber and UHV vacuum component, is a leading global supplier and manufacturer. Product categories are as follows:

- Synchrotron Radiation Research UHV Chamber
- Institutions for academic research UHV Chamber
- Standardized design UHV Chamber
- Customized UHV Chamber
- Oil free machining

Htc vacuum ultra-high vacuum (UHV) chambers are applicable for many kinds of application and configuration including synchrotron radiation, the requirement for scientific research, various of special customer's specifications and equipment of the functional requirements and also provide standard ultra-high vacuum (UHV) degassing chamber.

Acceptance criteria of Ultrahigh vacuum (UHV) chamber

- Material : 304S.S., 304LS.S., 316S.S.
- Surface treatment : Electrolytic polishing
- Leak Rate <2 x 10^{-10} mbar · l/sec
- 120°CVacuum baking 24 hours after the warmed working pressure <7.5 x 10^{-10} torr
- RGA total pressure <1 x10^{-9} torr, 45 amu more substances out of pressure <0.3%

Standard cleaning and inspection procedure

1 Ultrasonic cleaning → 2 Baking → 3 Cool down → 4 Checking → 5 RGA Testing → 6 Packaging

Acceptance criteria of special ultra-high vacuum (UHV) chamber will be manufactured according to customer requirements.

Dimension in mm unless otherwise noted
All information contained herein was current at time of publication, we reserve the right to change the design/specification for products improvement without notice.

UHV Chambers

Synchrotron Radiation Research
UHV Chamber

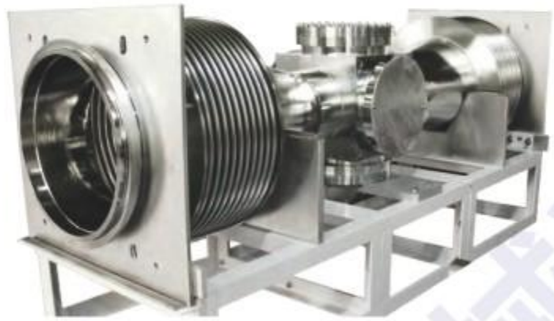

Institutions for academic research
UHV Chamber

Standardized design UHV Chamber

Customized UHV Chamber

Dimension in mm unless otherwise noted

All information contained herein was current at time of publication, we reserve the right to change the design/specification for products improvement without notice.

兴生机械科技
XingSheng Machinery Technology

09 VACUUM CHAMER&SYSTEM

Vacuum Module & System

The vacuum module and its variants for some materials in some vacuum-deposited on an area of the substrate, the substrate comprises three dimensional pieces, with the aim of its front surface a multilayer coating film, and the vacuum module can be used in vacuum systems.

Htc vacuum complies with the customer's requirements to proceed the design of the customized modules. The module will be assembled and tested by Htc.

The customized modules usually integrate the vacuum chamber, frame, vacuum pump, vacuum piping, and control system. The fuction of modules could be vacuum exhaust, substrate degassing, or products inspection in vacuum environment etc. Htc vacuum is able to supply a module tailored to customer's specifications.

Vacuum Evaporation and
Polymerization System

Cluster Transfer System
for Flexible Substrate Coating

Thin Film Solar Cell Sputtering
PVD System

Cutting Tool PVD Coating System

UHV System for Surface Analysis

Dimension in mm unless otherwise noted

All information contained herein was current at time of publication, we reserve the right to change the design/specification for products improvement without notice.

10 TECHNICAL INFORMATION

Coversion Table 10-2
Graphic Symbols for Important Comonents Used in Vacuum Technology.....10-4
Stainless Steel Specification Table.....10-7
Stainless Steel grade chart.....10-11
Temperature Range of Generic Elastomer.....10-19

Conversion Table

Pressure

		Pa		torr	micron		psi
	kg_f/cm^2	N/m^2	mbar	mm Hg	mtorr	atm	lb_f/in^2
kg_f/cm^2	1	$9.8x10^4$	$9.8x10^2$	$7.36x10^2$	$7.36x10^5$	$9.68x10^{-1}$	$1.42x10^1$
Pa	$1.02x10^{-5}$	1	$1x10^{-2}$	$7.5x10^{-3}$	7.5	$9.87x10^{-6}$	$1.45x10^{-4}$
mbar	$1.02x10^{-3}$	$1x10^2$	1	$7.5x10^{-1}$	$7.5x10^2$	$9.87x10^{-4}$	$1.45x10^{-2}$
torr	$1.36x10^{-3}$	$1.33x10^2$	1.33	1	$1x10^3$	$1.32x10^{-3}$	$1.93x10^{-2}$
micron	$1.36x10^{-6}$	$1.33x10^{-1}$	$1.33x10^{-3}$	$1x10^{-3}$	1	$1.32x10^{-6}$	$1.93x10^{-5}$
atm	1.03	$1.01x10^5$	$1.01x10^3$	$7.6x10^2$	$7.6x10^5$	1	$1.47x10^1$
psi	$7.03x10^{-2}$	$6.89x10^3$	$6.89x10^1$	$5.17x10^1$	$5.17x10^4$	$6.81x10^{-2}$	1

Example :

$5x10^{-4}$ Pa	$5.1x10^{-9}$	$5x10^{-4}$	$5x10^{-6}$	$3.75x10^{-6}$	$3.75x10^{-3}$	$4.94x10^{-9}$	$7.25x10^{-8}$

Length

	foot	inch	meter	centimeter	millimeter	micron
	ft	in	m	cm	mm	um
foot	1	$1.2x10^1$	$3.05x10^{-1}$	$3.05x10^1$	$3.05x10^2$	$3.05x10^5$
inch	$8.33x10^{-2}$	1	$2.54x10^{-2}$	2.54	$2.54x10^1$	$2.54x10^4$
meter	3.28	$3.94x10^1$	1	$1x10^2$	$1x10^3$	$1x10^6$
centimeter	$3.28x10^{-2}$	$3.94x10^{-1}$	$1x10^{-2}$	1	$1x10^1$	$1x10^4$
millimeter	$3.28x10^{-3}$	$3.94x10^{-2}$	$1x10^{-3}$	$1x10^{-1}$	1	$1x10^3$
micron	$3.28x10^{-6}$	$3.94x10^{-5}$	$1x10^{-6}$	$1x10^{-4}$	$1x10^{-3}$	1

Example :

2m	6.56	78.72	2	$2x10^2$	$2x10^3$	$2x10^6$

Weight

	kg	g	oz	lb
kg	1	$1x10^3$	$3.53x10^1$	2.21
g	$1x10^{-3}$	1	$3.53x10^{-2}$	$2.21x10^{-3}$
oz	$2.84x10^{-2}$	$2.84x10^1$	1	$6.25x10^{-2}$
lb	$4.54x10^{-1}$	$4.54x10^2$	$1.6x10^1$	1

Example :

2kg	2	$2x10^3$	$7.06x10^1$	4.42

All information contained herein was current at time of publication, we reserve the right to change the design/specification for products improvement without notice.

Force

	kg_f	N	oz_f	lb_f
kg_f	1	9.81	$3.53x10^{1}$	2.21
N	$1.02x10^{-1}$	1	3.6	$2.25x10^{-1}$
oz_f	$2.83x10^{-2}$	$2.78x10^{-1}$	1	$6.25x10^{-2}$
lb_f	$4.54x10^{-1}$	4.45	$1.6x10^{1}$	1

Example :

10N	1.02	10	36	2.25

Torque

	kg_f-m	N-m	oz_f -in	lb_f -ft
kg_f-m	1	9.81	$1.38x10^{3}$	7.23
N-m	$1.02x10^{-1}$	1	$1.41x10^{2}$	$7.38x10^{-1}$
oz_f-in	$7.25x10^{-4}$	$7.09x10^{-3}$	1	$5.21x10^{-3}$
lb_f-ft	$1.38x10^{-1}$	1.36	$1.92x10^{2}$	1

Example :

8 lb_f-ft	1.104	10.88	$1.54x10^{3}$	8

Flow Rate

	gpm	gps	l/m	l/s
gpm	1	$1.67x10^{-2}$	3.79	$6.31x10^{-2}$
gps	6x10	1	$2.27x10^{2}$	3.79
l/m	$2.64x10^{-1}$	$4.4x10^{-3}$	1	$1.67x10^{-2}$
l/s	1.59x10	$2.64x10^{-1}$	$6x10^{1}$	1

Example :

4gpm	4	$6.68x10^{-2}$	$1.52x10^{1}$	$2.52x10^{-1}$

Leak Rate

	pa.l/s	mbar.l/s	torr.l/s	std.cc/s
pa.l/s	1	$1x10^{-2}$	$7.5x10^{-3}$	$9.87x10^{-3}$
mbar.l.s	$1x10^{2}$	1	$7.5x10^{-1}$	$9.87x10^{-1}$
torr.l/s	$1.33x10^{2}$	1.33	1	1.32
std.cc/s	$1.01x10^{2}$	1.01	$7.6x10^{-1}$	1

Example :

$1x10^{-7}$std.cc/s	$1.01x10^{-5}$	$1.01x10^{-7}$	$7.6x10^{-8}$	$1x10^{-7}$

Dimension in mm unless otherwise noted
All information contained herein was current at time of publication, we reserve the right to change the design/specification for products improvement without notice.

兴生机械科技
XingSheng Machinery Technology

10 TECHNICAL INFORMATION

Graphic Symbols for Important Comonents Used in Vacuum Technology.(Extract from DIN 28 401 Std. Spec.)

Vacuum Pumps

Accessories

Dimension in mm unless otherwise noted
All information contained herein was current at time of publication, we reserve the right to change the design/specification for products improvement without notice.

Vacuum Chamber

Vacuum chamber

Isolating Devices

Butterfly valve

Gate valve

Isolating valve, Straight-throught valve

Non-return valve

Right-angle stop-cock

Right-angle valve

Safety shut-off valve

Shut-off device, general

Stop-cock

Three-way stop-cock

Valve Actuation

Electric motor operation

Electromagnetic operation

Hydraulic or pneumatic operation

Manual operation

Variable-leak valve

Weight-operated

Dimension in mm unless otherwise noted
All information contained herein was current at time of publication, we reserve the right to change the design/specification for products improvement without notice.

兴生机械科技
XingSheng Machinery Technology

10 TECHNICAL INFORMATION

Connections / Tubes

Branch-off point

Change in the cross-section of a duct

Clamped flange connection

Coooection of ducts

Cross-over of two ducts without connection

Flange connection bolted

Flange connection general

Flexible connection (e.g. bellows, flexible tubing)

Liner motion leadthrough, flange-mounted

Small flange connection

Threaded tube connection

Intersection of two ducts with connection
(Subject to international provision still to be agreed on, a contact point may be inserted for improved clearness)

Gauges

Vacuum gauge

Vacuum gauge control unit

Measurement of throughput
(This symbol must be used only in the position shown)

General Symbol

General symbol for vacuum
(This symbol must be used only in the position shown)

Dimension in mm unless otherwise noted
All information contained herein was current at time of publication, we reserve the right to change the design/specification for products improvement without notice.

Stainless Steel Specification Table

U.S.A. AISI	GERMANY DIN17 06	GERMANY W.N. 17007	FRANCE AFNOR	JAPAN JIS	ITALY UNI
201				SUS 201	
301	X12CrNi177	1.4310	Z12 CN 17-07	SUS 301	X12 CrNi 1707
302	X5CrNi187	1.4319	Z10 CN 18-09	SUS 302	X10 CrNi 1809
303	X10CrNiS189	1.4305	Z10 CNF 18-09	SUS 303	X10 CrNiS 1809
303Se			Z10 CNF 18-09	SUS 303Se	X10 CrNiS 1809
304	X5CrNi1810	1.4301	Z6 CN 18-09	SUS 304	
	X5CrNi1812	1.4303			
304N				SUS 304N1	X5 CrNiN 1810
304H				SUS F304H	X8 CrNi 1910
304L	X2CrNi1811	1.4306	Z2 CN 18-10	SUS 304L	X2 CrNi 1911
	X2CrNi1810	1.4311	Z2 CN 18-10-Az	SUS 304LN	X2 CrNiN 1811
305			Z8 CN 18-12	SUS 305	X8 CrNi 1812
			Z6CNU 18-10	SUS XM7	
309	X15CrNi2012	1.4828	Z15 CN 24-13	SUS 309	X16 CrNi 2314
309S				SUS 309S	X6 CrNi 2314
310	X12CrNi2521	1.4845		SUH 310	X22 CrNi 2520
310S	X12CrNi2520	1.4842	Z12 CN 25-20	SUS 310S	X5 CrNi 2520
314	X15CrNiSi2520	1.4841	Z12 CNS 25-20		X16 CrNiSi2520
316	X5CrNiMo17122	1.4401	Z6 CND 17-11	SUS 316	X5 CrNiMo1712
316	X5CrNiMo17133	1.4436	Z6 CND 17-12	SUS 316	X5 CrNiMo1713
316F	X12CrNiMoS1811	1.4427			
316N				SUS 316N	
316H				SUS F316H	X8 CrNiMo1712
316H					X8 CrNiMo1713
316L	X2CrNiMo17132	1.4404	Z2 CND 17-12	SUS 316L	X2 CrNiMo1712
	X2CrNiMoN17122	1.4406	Z2 CND 17-12-Az	SUS 316LN	X2 CrNiMoN1712
	X2CrNiMo18 143	1.4435	Z2 CND 17-13		X2 CrNiMo1713
	X2CrNiMo17 133	1.4429	Z2 CND 17-13-Az		X2 CrNiMoN1713
	X6CrNiMoTi17122	1.4571	Z6 CNDT17-12		X6 CrNiMoTi1712
	X10CrNiMo1812	1.4573			X6 CrNiMoTi1713
	X6CrNiMoNb17122	1.4580	Z6 CNDNb17-12		X6 CrNiMoNb1712
	X10CrNiMoNb1812	1.4583			X6 CrNiMoNb1713
317				SUS317	X5 CrNiMo1815
317L	X2CrNiMo18164	1.4438	Z2 CND19-15	SUS317L	X2 CrNiMo1815
317L	X2CrNiMo18164	1.4438	Z2 CND19-15	SUS317L	X2 CrNiMo1816
330	X12CrNiSi3616	1.4864	Z12 NCS35-16	SUH303	
321	X6CrNiTi1810	1.4541	Z6 CNT18-10	SUS321	X6 CrNiTi1811
	X12CrNiTi189	1.4878			

Dimension in mm unless otherwise noted

All information contained herein was current at time of publication, we reserve the right to change the design/specification for products improvement without notice.

兴生机械科技
XingSheng Machinery Technology

10 TECHNICAL INFORMATION

U.S.A. AISI	SWEDEN SIS	U.K. BSI	U.E. EURONORM	SPAIN UNE	RUSSIA GOST
201					
301	2331	301S21	X12 CrNi177	X12CrNi17-07	
302	2331	302S25	X10 CrNi189	X10CrNi18-09	12KH18N9
303	2346	303S21	X10 CrNiS189	X10CrNiS18-09	
303Se		303S41		X10CrNiS18-09	12KH18N10E
304	2332	304S15	X6CrNi 1810	X6CrNi19-10	08KH18N10
		304S16			06KH18N11
304N					
304H				X6CrNi19-10	
304L	2352	304S11	X3CrNi 1810	X2CrNi19-10	03KH18N11
	2371				
305	2333	305S19	X8CrNi 1812	X8CrNi 18-12	
			X6CrNiCu18104Kd		
309		309S24	X15CrNi 2313		
309S			X6CrNi 2213		
310		310S24			20KH23N18
310S	2361		X6CrNi 2520		10KH23N18
314			X15CrNiSi2520		20KH25N20S2
316	2347	316S31	X6CrNiMo 17122	X6CrNiMo17-12-03	
316	2343	316S33	X6CrNiMo 17133	X6CrNiMo17-12-03	
316F					
316N					
316H				X5CrNiMo17-12	
316H				X6CrNiMo17-12-03	
316L	2348	316S11	X3CrNiMo 17122	X2CrNiMo17-12-03	03KH17N14M2
	2353	316S13	X3CrNiTi 17133	X2CrNiMo17-12-03	03KH16N15M3
	2375				
	2350	320S31	X6CrNiMoTi 17122	X6CrNiMoTi17-12-03	08KH17N13M2T
					10KH17N13M2T
		320S33	X6CrNiMoTi17133	X6CrNiMoTi17-12-03	08KH17N13M2T
					10KH17N13M2T
			X6CrNiMoNb17122		08KH16N13M2B
			X6CrNiMoNb17133		09KH16N15M3B
317	2366	317S16			
317L	2367	317S12	X3CrNiMo 18164		
317L	2367	317S12	X3CrNiMo 18164		
330					
321	2337	321S31	X6CrNiTi1810	X6CrNiTi18-11	08KH18N10T

Dimension in mm unless otherwise noted

All information contained herein was current at time of publication, we reserve the right to change the design/specification for products improvement without notice.

Stainless Steel Specification Table

U.S.A.	GERMANY	GERMANY	FRANCE	JAPAN	ITALY
AISI	DIN17006	W.N. 17007	AFNOR	JIS	UNI
321H				SUS321H	X8 CrNiTi1811
329	X8CrNiMo275	1.4460		SUS329J1	
347	X6CrNiNb1810	1.4550	Z6CNNb 18-10	SUS347	X6 CrNiNb1811
347H				SUS F 347H	X8 CrNiNb1811
904L		1.4939	Z12CNDV 12-02		
	X20CrNiSi254	1.4821			
UNS31803	X2CrNiMoN225	1.4462			
UNS32760	X3CrNiMoN257	1.4501	Z3CND25-06Az		
403	X6Cr13	1.4000			
	X10Cr13	1.4006	Z12C13	SUS403	X12Cr13
	X15Cr13	1.4024			
405	X6CrAl13	1.4002	Z6CA13	SUS405	X6CrAl13
	X10CrAl7	1.4713	Z8CA7		
	X10CrAl13	1.4724			X10CrAl12
	X10CrAl18	1.4742			
409	X6CrTi18	1.4512	Z6CT12	SUS409	X6CrTi12
					X2CrTi12
410	X6Cr13	1.4000	Z10C13	SUS410	X12Cr13
	X10Cr13	1.4006	Z12C13		
	X15Cr13	1.4024			
410S	X6Cr13	1.4000	Z6C13	SUS410S	X6Cr13
414					

- These are austenitic grades
- These are ferritic grades
- These are ferritic-austenitic grades (otherwise known as Duplex and Superduplex)

U.S.A.	SWEDEN	U.K.	U.E.	SPAIN	RUSSA
AISI	SIS	BSI	EURONORM	UNE	GOST
321H		321S20		X7CrNiTi 18-11	12KH18N10T
329	23 24				
347	23 38	347S31	X6 CrNiNb 18 10	X6CrNiNb18-11	08KH18N12B
347H				X7CrNiNb 18-11	
904L					
UNS31803					
UNS32760					
403			X10Cr13		
	23 02	403S17	X12Cr13	X6Cr 13	12Kh13
405		405S17	X16CrAl13	X6CrAl 13	
			X10CrAl7		
					10Kh13SYu
			X10CrSiAl18		15Kh18SYu
409		409S19	X5CrTi12		
410	23 02	410S21	X12Cr13	X12Cr13	12Kh13
410S	23 01	403S17	X6Cr13		08Kh13
414					

- These are austenitic grades
- These are ferritic grades
- These are ferritic-austenitic grades (otherwise known as Duplex and Superduplex)

Dimension in mm unless otherwise noted
All information contained herein was current at time of publication, we reserve the right to change the design/specification for products improvement without notice.

Dimension in mm unless otherwise noted
All information contained herein was current at time of publication, we reserve the right to change the design/specification for products improvement without notice.

Stainless steel grade chart

Grade	Chemical analysis (%) specified								
	C	Si	Mn	P	S	Cr	Mo	Ni	Other
Austenitic stainless steels									
253MA	0.05-0.10	1.1-2.0	0.8	0.040	0.030	20.0-22.0			N 0.14-0.20 Ce 0.03-0.08
301	0.15	0.75	2.0	0.045	0.030	16.0-18.0			N 0.10
302HQ	0.03	1.00	2.0	0.045	0.030	17.0-19.0		8.0-10.0	Cu 3.0-4.0
303	0.15	1.00	2.0	0.20	0.15	17.0-19.0		8.0-10.0	
304	0.08	0.75	2.0	0.045	0.030	18.0-20.0		8.0-10.5	N 0.10
304L	0.030	1.00	2.0	0.045	0.030	18.0-20.0			N 0.10
304H	0.04-0.10	0.75	2.0	0.045	0.030	18.0-20.0			N 0.10
309S	0.08	1.00	2.0	0.045	0.030	22.0-24.0			
310	0.25	1.5	2.0	0.045	0.030	24.0-26.0		19.0-22.0	
316	0.08	0.75	2.0	0.045	0.030	16.0-18.0	2.0-3.0	10.0-14.0	N 0.10
316L	0.030	0.75	2.0	0.045	0.030	16.0-18.0	2.0-3.0	10.0-14.0	N 0.10
317L	0.030	0.75	2.0	0.045	0.030	18.0-20.0	3.0-4.0	11.0-15.0	N 0.10
321	0.08	0.75	2.0	0.045	0.030	17.0-19.0		9.0-12.0	N 0.10 Ti=5x(C+N) min. 0.70 max.
347	0.08	0.75	2.0	0.045	0.030	17.0-19.0		9.0-13.0	Nb 10xC min. 1.0 1.0 max.
904L	0.020	1.00	2.0	0.045	0.035	19.0-23.0	4.0-5.0	23.0-28.0	Cu 1.0-2.0

Note 1: Single values are maxima unless otherwise stated.
Note 2: Hardness specification limits given are HRB = Rockwell B scale, HRC = Rockwell C scale, HB = Brinell Hardness.
Note 4: Mechanical properties shown are for the commonly available form listed; properties of other forms for the grade may vary.

All information contained herein was current at time of publication, we reserve the right to change the design/specification for products improvement without notice.

兴生机械科技
XingSheng Machinery Technology

10 TECHNICAL INFORMATION

Grade	Mechanical properties specified (Note4)					
	Common form	Treatment	Tensile strength MPa (min.)	Yield strength (0.2% offset) MPa (min.)	Elongation % in 50mm (min.)	Hardness (max) (Note 2)
Austenitic stainless steels						
253MA	Plate	Annealed	600	310	40	95HRB
301	Sheet or coil	Annealed 1/4 to full hard	515 860-1275	205 515-965	40 25-9	95HRB
302HQ	Wire 2.5mm dia. and over	Annealed Lightly drawn	605 max. 660 max	-	-	-
303	Bar	Cold finished Condition A				262 HB
304	Plate	Annealed	515	205	40	92 HRB
304L	Plate	Annealed	485	170	40	88 HRB
304H	Plate	Annealed	515	205	40	92 HRB
309S	Bar	Annealed	515	205	40	95 HRB
310	Plate	Annealed	515	205	40	95 HRB
316	Plate	Annealed	515	205	40	95 HRB
316L	Plate	Annealed	485	170	40	95 HRB
317L	Plate	Annealed	515	205	40	95 HRB
321	Sheet	Annealed	515	205	40	95 HRB
347	Plate	Annealed	515	205	40	92 HRB
904L	Plate	Annealed	490	220	35	70-90 NRB typical

Note 1: Single values are maxima unless otherwise stated.
Note 2: Hardness specification limits given are HRB = Rockwell B scale, HRC = Rockwell C scale, HB = Brinell Hardness.
Note 4: Mechanical properties shown are for the commonly available form listed; properties of other forms for the grade may vary.

All information contained herein was current at time of publication, we reserve the right to change the design/specification for products improvement without notice.

Stainless steel grade chart

Grade	ASTM standard and product use						
	A167 A240 A666 sheet, coil, strip, plate	A312 A358 A409 pipe	A213 A249 A269 A554 tube	A403 buttweld fittings	A276 A582 bar and shapes	A313 A493 A580 wire	A182 flanges pressure fittings
Austenitic stainless steels							
253MA							
301							
302HQ							
303					Also UGIMA		
304					Also UGIMA		
304L							
304H							
309S							
310							
316					Also UGIMA		
316L							
317L							
321							
347							
904L							

Note 1: Single values are maxima unless otherwise stated.

Note 2: Hardness specification limits given are HRB = Rockwell B scale, HRC = Rockwell C scale, HB = Brinell Hardness.

Note 4: Mechanical properties shown are for the commonly available form listed; properties of other forms for the grade may vary.

All information contained herein was current at time of publication, we reserve the right to change the design/specification for products improvement without notice.

兴生机械科技
XingSheng Machinery Technology

10 TECHNICAL INFORMATION

Grade	Properties and typical applications
Austenitic stainless steels	
253MA	
301	Combination of strength and ductility to withstand severe forming methods. Corrosion resistance comparable to 302. Rail cars, automotive components.
302HQ	Wire for severe cold heading such as the manufacture of cross recess screws. Corrosion resistance at least equivalent to type 304.
303	Free machining grade. Domestic and mild industrial environment. Water low in chlorides. Nuts and bolts, shafts, fittings. Corrosion resistance lower than 304.
304	Good resistance to corrosion, good for malleability and weldability. Most commonly used grade. Wine storage, laundry and kitchen products, water, food, architectural, cryogenic and high temperature applications. UGIMA 304 – improved machinability bar with same properties.
304L	Corrosion resistance as for 304. Low carbon variation for heavy gauge welded sections.
304H	Corrosion resistance as for 304. High carbon gives improved high temperature strength.
309S	Excellent resistance to corrosion, particularly attack by hot sulphur compounds in oxidising gases. Sulphite liquors and acids such as acetic, citric, lactic and nitric. Welding wire for joining dissimilar steels.
310	Excellent corrosion resistance at normal temperatures. Good resistance to oxidisation and car- 850 7 1100 7. - similar steels.
316	High corrosion resistance to the complex sulphur compounds used in pulp and paper processing. Also resists attack by marine and corrosive industrial atmospheres. Suitable for mild seacoast atmosphere, pulp and paper, heat exchangers, propeller shafts, dying equipment. UGIMA 316 improved machinability bar, with same properties.
316L	Corrosion resistance as for 316. Low carbon variation, suitable for heavy gauge welding.
317L	Improved corrosion resistance over type 316. Often successfully applied where type 316 has given only moderate performance. Applications such as acetic acid distillation, pulp and paper machinery, ink and dying processes. 317L is a variation of 317 suitable for heavy gauge welding.
321	Excellent corrosion resistance, equivalent to 304 in the annealed condition and superior if the 425 7-870 7 . furnace parts, aerospace and power industries, heat exchangers and steam generators.
347	This grade is resistant to chromium carbide precipitation. Most commonly found as a consumable for welding 321.
904L	Super austenitic' grade with very high corrosion resistance, especially to strong acids and chlorides. Frequently used in sulphuric acid service.

Note 1: Single values are maxima unless otherwise stated.

Note 2: Hardness specification limits given are HRB = Rockwell B scale, HRC = Rockwell C scale, HB = Brinell Hardness.

Note 3: 3CR12 generally conforms with both ASTM A240 grade S41003 and with EN 10088 Parts 1 and 2, grade 1.4003. Properties quoted are from EN 10088.2.

Note 4: Mechanical properties shown are for the commonly available form listed; properties of other forms for the grade may vary.

All information contained herein was current at time of publication, we reserve the right to change the design/specification for products improvement without notice.

Stainless steel grade chart

Grade	Chemical analysis (%) specified								
	C	Si	Mn	P	S	Cr	Mo	Ni	Other
Ferritic stainless steels									
3CR12 (Note 3)	0.03	1.00	1.50	0.040	0.015	10.5-12.5			N 0.03
409	0.08	1.0	1.0	0.045	0.030	10.5-11.75			Ti 6xC min. 0.75 max.
430	0.12	1.0	1.0	0.04	0.030	16.0-18.0			
430F	0.12	1.0	1.25	0.06	0.15 min	16.0-18.0			
434	0.12	1.0	1.0	0.04	0.03	16.0-18.0	0.75-1.25		
Ferritic/Austenitic (Duplex) stainless steels									
2205	0.030	1.00	2.0	0.030	0.020	21.0-23.0	2.5-3.5	4.5-6.5	N 0.08-0.20
UR52N+	0.030	0.80	1.50	0.035	0.020	24.0-26.0 4.0	3.0	5.5-8.0 Cu 0.5-2.0	N 0.20-0.35
Martensitic stainless steels									
410	0.15	1.00	1.00	0.040	0.030	11.5-13.5		0.75	
420	0.15 min	1.00	1.00	0.040	0.030	12.0-14.0			
431	0.20	1.00	1.00	0.040	0.030	15.0-17.0		1.25-2.50	
Precipitation hardening steel									
630			1.00	0.040	0.030	15.0-17.0		3.0-5.0	Cu 3.0-5.0 Nb+Ta 0.15-0.45

Note 1: Single values are maxima unless otherwise stated.
Note 2: Hardness specification limits given are HRB = Rockwell B scale, HRC = Rockwell C scale, HB = Brinell Hardness.
Note 3: 3CR12 generally conforms with both ASTM A240 grade S41003 and with EN 10088 Parts 1 and 2, grade 1.4003. Properties quoted are from EN 10088.2.
Note 4: Mechanical properties shown are for the commonly available form listed; properties of other forms for the grade may vary.

All information contained herein was current at time of publication, we reserve the right to change the design/specification for products improvement without notice.

兴生机械科技
XingSheng Machinery Technology

10 TECHNICAL INFORMATION

Grade	Mechanical properties specified (Note 4)					
	Common form	Treatment	Tensile strength MPa (min.)	Yield strength (0.2% offset) MPa (min.)	Elongation % in 50mm (min.)	Hardness (max) (Note 2)
Ferritic stainless steels						
3CR12 (Note 3)	Plate	Annealed	450-650	280 (>6mm) 320 (≦6mm)	18 (>6mm) 20 (≦6mm)	220 HB(≦12mm) 250 (>12mm)
409	Tube	Annealed	380	205	20	95 HRB
430	Sheet	Annealed	450	205	22	89 HRB
430F	Bar	Annealed	550	380	25	262 HB
434	Sheet and strip	Annealed	450	240	22	89 HRB
Ferritic/Austenitic (Duplex) stainless steels						
2205	Plate	Annealed	620	450	25	31 HRC
UR52N+	Plate		770	550	25	310 HRB
Martensitic stainless steels						
410	Plate	Annealed	450	205	20	96 HRB
420	Bar	Annealed	655 typical	345 typical	25 typical	241 HB
431	Bar	Annealed	860 typical			285 HRB
Precipitation hardening steel						
630	Bar	Solution treated	1105 typical	1000 typical	15 typical	38 HRC

Note 1: Single values are maxima unless otherwise stated.
Note 2: Hardness specification limits given are HRB = Rockwell B scale, HRC = Rockwell C scale, HB = Brinell Hardness.
Note 3: 3CR12 generally conforms with both ASTM A240 grade S41003 and with EN 10088 Parts 1 and 2, grade 1.4003. Properties quoted are from EN 10088.2.
Note 4: Mechanical properties shown are for the commonly available form listed; properties of other forms for the grade may vary.

All information contained herein was current at time of publication, we reserve the right to change the design/specification for products improvement without notice.

Grade	ASTM standard and product use						
	A167 A240 A666 sheet, coil, strip, plate	A312 A358 A409 pipe	A213 A249 A269 A554 tube	A403 buttweld fittings	A276 A582 bar and shapes	A313 A493 A580 wire	A182 flanges pressure fittings
Ferritic stainless steels							
3CR12 (Note 3)	■						
409	■	■	■			■	
430	■		■		■	■	
430F					■		
434	■					■	
Ferritic/Austenitic (Duplex) stainless steels							
2205	■	■	■	■	■	■	■
UR52N+	■	■	■	■	■	■	■
Martensitic stainless steels							
410	■				■	■	
420	■				■	■	
431					■	■	
Precipitation hardening steel							
630					■		

Note 1: Single values are maxima unless otherwise stated.
Note 2: Hardness specification limits given are HRB = Rockwell B scale, HRC = Rockwell C scale, HB = Brinell Hardness.
Note 3: 3CR12 generally conforms with both ASTM A240 grade S41003 and with EN 10088 Parts 1 and 2, grade 1.4003. Properties quoted are from EN 10088.2.
Note 4: Mechanical properties shown are for the commonly available form listed; properties of other forms for the grade may vary.

All information contained herein was current at time of publication, we reserve the right to change the design/specification for products improvement without notice.

兴生机械科技
XingSheng Machinery Technology

10 TECHNICAL INFORMATION

Grade	Properties and typical applications
Ferritic stainless steels	
3CR12 (Note 3)	Useful corrosion resistance particularly in wet abrasion environments. Readily welded and formed into tanks, flues, bins, chutes, rail wagons, etc.
409	Resists atmospheric and automotive exhaust gas corrosion. Extensively used in auto exhaust systems.
430	Good combinations of corrosion resistance, formability and mechanical properties. Typical applications include automotive trims, element supports, cold headed fasteners, refrigerator doors.
430F	430F is a free machining version of 430, suitable for high speed machining. Corrosion resistance is lower than 430.
434	Molybdenum improves the pitting resistance over grade 430. Good for automotive trim components.
Ferritic/Austenitic (Duplex) stainless steels	
2205	2205 microstructure is approximately 50% ferrite and 50% austenitic, which results in the steel possessing high strength and hardness, and resistance to erosion, fatigue, stress corrosion cracking and pitting and crevice corrosion. Applications in marine, chemical and petrochemical industries.
UR52N+	Super Duplex' grade exhibiting exceptional resistance to hot chlorides and sulphides with high strength. Applications in marine, chemical and petrochemical industries.
Martensitic stainless steels	
410	Resists dry atmospheres, fresh water, mild alkalines and acids, steam and hot gases. Must be hardened for maximum heat and corrosion resistance. Typical applications include cold heading, bolts, nuts and screws, pump parts and shafts, steam and gas turbine parts, mine ladder rungs.
420	Good resistance in the hardened condition to the atmosphere. Food, fresh water and mild alkalines or acids. Higher carbon hardenable grade. Typical applications include cutlery, surgical instruments, shear blades, needle valves.
431	Excellent resistance to a wide variety of corrosive media, approaching that of 304. High tensile and torque strength. Pump and boat shafts, nuts, bolts and marine hardware.
Precipitation hardening steel	
630	Precipitation hardening ('aging') treatment after machining gives high strength without distortion. Corrosion resistance similar to type 304. Pump shafts and valve spindles.

Note 1: Single values are maxima unless otherwise stated.
Note 2: Hardness specification limits given are HRB = Rockwell B scale, HRC = Rockwell C scale, HB = Brinell Hardness.
Note 3: 3CR12 generally conforms with both ASTM A240 grade S41003 and with EN 10088 Parts 1 and 2, grade 1.4003. Properties quoted are from EN 10088.2.
Note 4: Mechanical properties shown are for the commonly available form listed; properties of other forms for the grade may vary.

All information contained herein was current at time of publication, we reserve the right to change the design/specification for products improvement without notice.

Temperature Range of Generic Elastomers

ELASTOMER	TEMPERATURE RANGE
EPICHLOROHYDRIN	- 20°C ~ 120°C
URETHANE	- 40°C ~ 93°C
NEOPRENE	- 54°C ~ 121°C
NITRILE	- 54°C ~ 121°C
HYDROGENATED NITRILE	- 5°C ~ 150°C
ETHYLENE PROPYLENE	- 54°C ~ 150°C
FLUOROSILICONE	- 40°C ~ 177°C
SILICONE	- 50°C ~ 200°C
FKM FLUOROCARBON	- 5°C ~ 204°C
CHEMRAZ PERFLUOROELASTOMER	- 25°C ~ 260°C

Polyurethane (AU)

- Is a very tough, abrasion and wear-resistant elastoplastic material well suited for use as a hydraulic rod or piston seal in heavy duty applications such as construction and lift equipment. Most polyurethane compounds have a service temperature range from -40°C to +93°C.

Neoprene (CR)

- Is a good general purpose polymer with a wide temperature range from -54°C to +121°C. Neoprene exhibits moderate resistance to a broad range of fluids. These attributes account for its wide use as a commercial seal material.

Nitrile (NBR)

- Is a popular polymer with excellent resistance to petroleum-based fluids, a good balance of physical properties and a wide temperature range from-54°C to +121°C. Nitrile is the most widely used polymer in the seal industry today, being the base polymer for most military rubber specifications for fuel and oil-resistant MS and AN materials.

Hydrogenated Nitrile (HNBR)

- Is a newer polymer type similar to nitrile with improved high-temperature capabilities. Also known as HSN(highly saturated nitrile), HNBR is capable of resisting temperatures up to +150°C with excellent resistance to petroleum-based fluid. Available in a variety of automotive rubber specification grades.

Ethylene Propylene (EPDM)

- Is widely specified as a seal material due to its excellent resistance to Skydrol and other phosphate ester based hydraulic fluids. Ethylene propylene has a temperature range from 54°C to +150°C and is suitable for steam service to +204°C. EPDM materials are widely used to seal automotive brake fluids and in aircraft hydraulic systems.

Dimension in mm unless otherwise noted
All information contained herein was current at time of publication, we reserve the right to change the design/specification for products improvement without notice.

兴生机械科技
XingSheng Machinery Technology

10 TECHNICAL INFORMATION

Silicone (SI)

- As a glass this polymer exhibits exceptional heat and compression set resistance but relatively poor tensile strength, tear and abrasion resistance. Silicones have the advantage of being useful in wide temperature extremes.The maximum recommended temperature for continuous service is +200°C. Silicone is recommended for use in dry heat, high-aniline point oils and chlorinated di-phenyls.

Fluorocarbon (FKM,VITON)

- Is the second most popular seal material after nitrile. Fluorocarbon polymers have wide-spectrum chemical resistance and a very broad temperature range from -29°C to +204°C. Properly formulated, some fluorocarbon materials have been known to seal temperatures as high as +316°C for short periods. Some fluorocarbon compounds can be used in low temperature static sealing applications to -54°C. FKM is widely used in aircraft, aerospace, automotive and other applications requiring maximum resistance to deterioration by environment and/or fluids.

Perfluoroelastomer (FFKM)

- Is a new class of seal material combining the chemical resistance of PTFE with the elastic properties of fluorocarbon. The materials are an excellent choice for use in high-heat applications where harsh chemical environments are present, as in semiconductor processing equipment. FFKM has a temperature range from -25°C to +260°C.

Polyacrylate (ACM)

- Has outstanding resistance to petroleum-based fuels and oils. In addition, this material has good resistance to oxidation, ozone and sunlight, with the ability to resist flex cracking. The temperature range of polyacrylate materials is from -18°C to +150°C. ACM is widely used in the automotive industry for automatic transmission and power steering service.

Butyl (IIR)

- Prior to the introduction of ethylene, butyl polymers were used to seal phosphate ester type hydraulic fluids. Currently butyl finds its widest sealing application in vacuum systems because of its very low gas permeation rates. The temperature range of butyl is -54°C to +107°C.

Fluorosilicone (FVMQ)

- combines the excellent temperature range of silicone with good resistance to petroleum-based fuels and lubricants. Currently, the primary use of fluorosilicone materials is for seals in aircraft fuel systems at temperatures up to +177°C and in applications where high heat environments are combined with potential exposure to petroleum oils and/or hydrocarbon fuels. High-strength fluorosilicone materials with better wear resistance have been developed, and some of these also exhibit much improved resistance to compression set.

Polytetra fluoroethy lene (PTFE)

- Is a very stable polymer with extremely good resistance to almost all known chemicals as well as a very wide temperature range from -268°C to over +288°C. PTFE may be fabricated in its pure state or blended with various fillers to produce a material better suited for a particular application. PTFE has very low friction and is widely used for piston seals and other applications such as valve stem seals where resistance to temperature extremes and harsh chemicals is required.

PEEK

- Is an acronym for polyetheretherketone, a high-temperature-resistant plastic used for backups and other sealing components where extrusion resistance, high-temperature capability and a broad resistance to chemical environments is needed. Available in unmodified or glass-fill formulations, PEEK has a long-term service temperature capability of +232°C.

Nylon

- Is a generic name for a well-known family of plastics used widely in the sealing industry as anti-extrusion devices. Nylon is resistant to a variety of petroleum and phosphate ester hydraulic fluids. Nylon's temperature range is -55°C to +120°C.

Dimension in mm unless otherwise noted
All information contained herein was current at time of publication, we reserve the right to change the design/specification for products improvement without notice.